Hardware Locality (hwloc)

master-20240705.0658.git8f84e8d74

Generated by Doxygen 1.8.17

1 Hardware Locality 1

1.1 Table of Contents . . . 1

1.2 hwloc Overview . . . 2

1.3 Command-line Examples . . . 2

1.4 Programming Interface . . . 4

1.4.1 Portability . . . 5

1.4.2 API Example . . . 6

1.5 Questions and Bugs . . . 8

1.6 History / Credits . . . 8

2 Installation 9

2.1 Basic Installation . . . 9

2.2 Optional Dependencies . . . 9

2.3 Installing from a Git clone . . . 10

3 Compiling software on top of hwloc's C API 11

3.1 Compiling on top of hwloc's C API with GNU Make . . . 11

3.2 Compiling on top of hwloc's C API with CMake . . . 11

4 Terms and Definitions 13

4.1 Objects . . . 13

4.2 Indexes and Sets . . . 13

4.3 Hierarchy, Tree and Levels . . . 14

5 Command-Line Tools 17

5.1 lstopo and lstopo-no-graphics . . . 17

5.2 hwloc-bind . . . 17

5.3 hwloc-calc . . . 17

5.4 hwloc-info . . . 18

5.5 hwloc-distrib . . . 18

5.6 hwloc-ps . . . 18

5.7 hwloc-annotate . . . 18

5.8 hwloc-diff, hwloc-patch and hwloc-compress-dir . . . 18

5.9 hwloc-dump-hwdata . . . 18

5.10 hwloc-gather-topology and hwloc-gather-cpuid . . . 18

6 Environment Variables 21

7 CPU and Memory Binding Overview 25

7.1 Binding Policies and Portability . . . 25

7.2 Joint CPU and Memory Binding (or not) . . . 25

7.3 Current Memory Binding Policy . . . 26

8 I/O Devices 27

8.1 Enabling and requirements . . . 27

8.2 I/O objects . . . 27
8.3 OS devices . . . 27
8.4 PCI devices and bridges . . . 29
8.5 Consulting I/O devices and binding . . . 29
8.6 Examples . . . 29

9 Miscellaneous objects **33**
9.1 Misc objects added by hwloc . . . 33
9.2 Annotating topologies with Misc objects . . . 33

10 Object attributes **35**
10.1 Normal attributes . . . 35
10.2 Custom string infos . . . 36
10.2.1 Hardware Platform Information . . . 36
10.2.2 Operating System Information . . . 36
10.2.3 hwloc Topology Information . . . 36
10.2.4 CPU Information . . . 37
10.2.5 OS Device Information . . . 37
10.2.6 Other Object-specific Information . . . 38
10.2.7 User-Given Information . . . 39

11 Topology Attributes: Distances, Memory Attributes and CPU Kinds **41**
11.1 Distances . . . 41
11.2 Memory Attributes . . . 42
11.3 CPU Kinds . . . 42

12 Heterogeneous Memory **45**
12.1 Memory Tiers . . . 45
12.2 Using Heterogeneous Memory from the command-line . . . 46
12.3 Using Heterogeneous Memory from the C API . . . 46
12.3.1 Iterating over the list of (heterogeneous) NUMA nodes . . . 46
12.3.2 Iterating over local (heterogeneous) NUMA nodes . . . 47

13 Importing and exporting topologies from/to XML files **49**
13.1 libxml2 and minimalistic XML backends . . . 49
13.2 XML import error management . . . 50

14 Synthetic topologies **51**
14.1 Synthetic description string . . . 51
14.2 Loading a synthetic topology . . . 52
14.3 Exporting a topology as a synthetic string . . . 52

15 Interoperability With Other Software **53**

16 Thread Safety **55**

17 Components and plugins **57**
17.1 Components enabled by default . . . 57
17.2 Selecting which components to use . . . 57
17.3 Loading components from plugins . . . 58
17.4 Existing components and plugins . . . 58

18 Embedding hwloc in Other Software **61**
18.1 Using hwloc's M4 Embedding Capabilities . . . 61
18.2 Example Embedding hwloc . . . 62

19 Frequently Asked Questions (FAQ) **65**
19.1 Concepts . . . 65
19.1.1 I only need binding, or the number of cores, why should I use hwloc ? . . . 65
19.1.2 What may I disable to make hwloc faster? . . . 65
19.1.3 Should I use logical or physical/OS indexes? and how? . . . 66
19.1.4 hwloc is only a structural model, it ignores performance models, memory bandwidth, etc.? . 66
19.1.5 hwloc only has a one-dimensional view of the architecture, it ignores distances? . . . 67
19.1.6 What are these Group objects in my topology? . . . 67
19.1.7 What happens if my topology is asymmetric? . . . 67
19.1.8 What happens to my topology if I disable symmetric multithreading, hyper-threading, etc. in the system? . . . 68
19.1.9 How may I ignore symmetric multithreading, hyper-threading, etc. in hwloc? . . . 68
19.2 Advanced . . . 69
19.2.1 I do not want hwloc to rediscover my enormous machine topology every time I rerun a process 69
19.2.2 How many topologies may I use in my program? . . . 69
19.2.3 How to avoid memory waste when manipulating multiple similar topologies? . . . 70
19.2.4 How do I annotate the topology with private notes? . . . 70
19.2.5 How do I create a custom heterogeneous and asymmetric topology? . . . 70
19.3 Caveats . . . 71
19.3.1 Why is lstopo slow? . . . 71
19.3.2 Does hwloc require privileged access? . . . 71
19.3.3 What should I do when hwloc reports "operating system" warnings? . . . 72
19.3.4 Why does Valgrind complain about hwloc memory leaks? . . . 72
19.4 Platform-specific . . . 72
19.4.1 How do I enable ROCm SMI and select which version to use? . . . 72
19.4.2 How do I enable CUDA and select which CUDA version to use? . . . 73
19.4.3 How do I find the local MCDRAM NUMA node on Intel Xeon Phi processor? . . . 73
19.4.4 Why do I need hwloc-dump-hwdata for memory on Intel Xeon Phi processor? . . . 73
19.4.5 How do I build hwloc for Windows? . . . 74
19.4.6 How to get useful topology information on NetBSD? . . . 74
19.4.7 Why does binding fail on AIX? . . . 74
19.5 Compatibility between hwloc versions . . . 74
19.5.1 How do I handle API changes? . . . 74

19.5.2 What is the difference between API and library version numbers? . . . 75
19.5.3 How do I handle ABI breaks? . . . 75
19.5.4 Are XML topology files compatible between hwloc releases? . . . 76
19.5.5 Are synthetic strings compatible between hwloc releases? . . . 76
19.5.6 Is it possible to share a shared-memory topology between different hwloc releases? . . . 76

20 Upgrading to the hwloc 3.0 API **77**
20.1 OS device type is now a bitmask . . . 77
20.2 Finding the level depth from a type and some attributes . . . 77
20.3 Info attribute structure . . . 78
20.4 Root and topology infos . . . 78
20.5 Distances structure kinds . . . 78
20.6 XML changes . . . 78
20.7 API Deprecations . . . 79
20.8 API Removals . . . 79

21 Module Index **81**
21.1 Modules . . . 81

22 Data Structure Index **83**
22.1 Data Structures . . . 83

23 Module Documentation **85**
23.1 Error reporting in the API . . . 85
23.2 API version . . . 86
23.2.1 Detailed Description . . . 86
23.2.2 Macro Definition Documentation . . . 86
23.2.2.1 HWLOC_API_VERSION . . . 86
23.2.2.2 HWLOC_COMPONENT_ABI . . . 86
23.2.3 Function Documentation . . . 86
23.2.3.1 hwloc_get_api_version() . . . 86
23.3 Object Sets (hwloc_cpuset_t and hwloc_nodeset_t) . . . 87
23.3.1 Detailed Description . . . 87
23.3.2 Typedef Documentation . . . 87
23.3.2.1 hwloc_const_cpuset_t . . . 87
23.3.2.2 hwloc_const_nodeset_t . . . 87
23.3.2.3 hwloc_cpuset_t . . . 87
23.3.2.4 hwloc_nodeset_t . . . 87
23.4 Object Types . . . 88
23.4.1 Detailed Description . . . 88
23.4.2 Macro Definition Documentation . . . 88
23.4.2.1 HWLOC_TYPE_UNORDERED . . . 88
23.4.3 Typedef Documentation . . . 88
23.4.3.1 hwloc_obj_bridge_type_t . . . 88

23.4.3.2 hwloc_obj_cache_type_t . . . 88
23.4.3.3 hwloc_obj_osdev_type_t . . . 89
23.4.4 Enumeration Type Documentation . . . 89
23.4.4.1 hwloc_obj_bridge_type_e . . . 89
23.4.4.2 hwloc_obj_cache_type_e . . . 89
23.4.4.3 hwloc_obj_osdev_type_e . . . 89
23.4.4.4 hwloc_obj_type_t . . . 90
23.4.5 Function Documentation . . . 92
23.4.5.1 hwloc_compare_types() . . . 92
23.5 Object Structure and Attributes . . . 93
23.5.1 Detailed Description . . . 93
23.5.2 Typedef Documentation . . . 93
23.5.2.1 hwloc_obj_t . . . 93
23.6 Topology Creation and Destruction . . . 94
23.6.1 Detailed Description . . . 94
23.6.2 Typedef Documentation . . . 94
23.6.2.1 hwloc_topology_t . . . 94
23.6.3 Function Documentation . . . 94
23.6.3.1 hwloc_topology_abi_check() . . . 94
23.6.3.2 hwloc_topology_check() . . . 94
23.6.3.3 hwloc_topology_destroy() . . . 95
23.6.3.4 hwloc_topology_dup() . . . 95
23.6.3.5 hwloc_topology_init() . . . 95
23.6.3.6 hwloc_topology_load() . . . 96
23.7 Object levels, depths and types . . . 97
23.7.1 Detailed Description . . . 97
23.7.2 Enumeration Type Documentation . . . 97
23.7.2.1 hwloc_get_type_depth_e . . . 97
23.7.3 Function Documentation . . . 98
23.7.3.1 hwloc_get_depth_type() . . . 98
23.7.3.2 hwloc_get_memory_parents_depth() . . . 98
23.7.3.3 hwloc_get_nbobjs_by_depth() . . . 98
23.7.3.4 hwloc_get_nbobjs_by_type() . . . 98
23.7.3.5 hwloc_get_next_obj_by_depth() . . . 99
23.7.3.6 hwloc_get_next_obj_by_type() . . . 99
23.7.3.7 hwloc_get_obj_by_depth() . . . 99
23.7.3.8 hwloc_get_obj_by_type() . . . 99
23.7.3.9 hwloc_get_root_obj() . . . 100
23.7.3.10 hwloc_get_type_depth() . . . 100
23.7.3.11 hwloc_get_type_depth_with_attr() . . . 100
23.7.3.12 hwloc_get_type_or_above_depth() . . . 100
23.7.3.13 hwloc_get_type_or_below_depth() . . . 101

23.7.3.14 hwloc_topology_get_depth() . . . 101
23.8 Converting between Object Types and Attributes, and Strings . . . 102
23.8.1 Detailed Description . . . 102
23.8.2 Enumeration Type Documentation . . . 102
23.8.2.1 hwloc_obj_snprintf_flag_e . . . 102
23.8.3 Function Documentation . . . 102
23.8.3.1 hwloc_obj_attr_snprintf() . . . 102
23.8.3.2 hwloc_obj_type_snprintf() . . . 103
23.8.3.3 hwloc_obj_type_string() . . . 103
23.8.3.4 hwloc_type_sscanf() . . . 103
23.9 Consulting and Adding Info Attributes . . . 105
23.9.1 Detailed Description . . . 105
23.9.2 Enumeration Type Documentation . . . 105
23.9.2.1 hwloc_modify_infos_op_e . . . 105
23.9.3 Function Documentation . . . 106
23.9.3.1 hwloc_get_info_by_name() . . . 106
23.9.3.2 hwloc_modify_infos() . . . 106
23.9.3.3 hwloc_obj_add_info() . . . 106
23.9.3.4 hwloc_obj_get_info_by_name() . . . 107
23.9.3.5 hwloc_obj_set_subtype() . . . 107
23.9.3.6 hwloc_topology_get_infos() . . . 107
23.10 CPU binding . . . 108
23.10.1 Detailed Description . . . 108
23.10.2 Enumeration Type Documentation . . . 108
23.10.2.1 hwloc_cpubind_flags_t . . . 109
23.10.3 Function Documentation . . . 109
23.10.3.1 hwloc_get_cpubind() . . . 109
23.10.3.2 hwloc_get_last_cpu_location() . . . 110
23.10.3.3 hwloc_get_proc_cpubind() . . . 110
23.10.3.4 hwloc_get_proc_last_cpu_location() . . . 110
23.10.3.5 hwloc_get_thread_cpubind() . . . 111
23.10.3.6 hwloc_set_cpubind() . . . 111
23.10.3.7 hwloc_set_proc_cpubind() . . . 111
23.10.3.8 hwloc_set_thread_cpubind() . . . 112
23.11 Memory binding . . . 113
23.11.1 Detailed Description . . . 113
23.11.2 Enumeration Type Documentation . . . 114
23.11.2.1 hwloc_membind_flags_t . . . 114
23.11.2.2 hwloc_membind_policy_t . . . 115
23.11.3 Function Documentation . . . 116
23.11.3.1 hwloc_alloc() . . . 116
23.11.3.2 hwloc_alloc_membind() . . . 116

23.11.3.3 hwloc_alloc_membind_policy() . . . 117
23.11.3.4 hwloc_free() . . . 117
23.11.3.5 hwloc_get_area_membind() . . . 117
23.11.3.6 hwloc_get_area_memlocation() . . . 118
23.11.3.7 hwloc_get_membind() . . . 118
23.11.3.8 hwloc_get_proc_membind() . . . 119
23.11.3.9 hwloc_set_area_membind() . . . 119
23.11.3.10 hwloc_set_membind() . . . 119
23.11.3.11 hwloc_set_proc_membind() . . . 120
23.12 Changing the Source of Topology Discovery . . . 121
23.12.1 Detailed Description . . . 121
23.12.2 Enumeration Type Documentation . . . 121
23.12.2.1 hwloc_topology_components_flag_e . . . 121
23.12.3 Function Documentation . . . 121
23.12.3.1 hwloc_topology_set_components() . . . 121
23.12.3.2 hwloc_topology_set_pid() . . . 122
23.12.3.3 hwloc_topology_set_synthetic() . . . 122
23.12.3.4 hwloc_topology_set_xml() . . . 123
23.12.3.5 hwloc_topology_set_xmlbuffer() . . . 123
23.13 Topology Detection Configuration and Query . . . 124
23.13.1 Detailed Description . . . 124
23.13.2 Enumeration Type Documentation . . . 124
23.13.2.1 hwloc_topology_flags_e . . . 124
23.13.2.2 hwloc_type_filter_e . . . 128
23.13.3 Function Documentation . . . 128
23.13.3.1 hwloc_topology_get_flags() . . . 129
23.13.3.2 hwloc_topology_get_support() . . . 129
23.13.3.3 hwloc_topology_get_type_filter() . . . 129
23.13.3.4 hwloc_topology_get_userdata() . . . 130
23.13.3.5 hwloc_topology_is_thissystem() . . . 130
23.13.3.6 hwloc_topology_set_all_types_filter() . . . 130
23.13.3.7 hwloc_topology_set_cache_types_filter() . . . 130
23.13.3.8 hwloc_topology_set_flags() . . . 131
23.13.3.9 hwloc_topology_set_icache_types_filter() . . . 131
23.13.3.10 hwloc_topology_set_io_types_filter() . . . 131
23.13.3.11 hwloc_topology_set_type_filter() . . . 131
23.13.3.12 hwloc_topology_set_userdata() . . . 132
23.14 Modifying a loaded Topology . . . 133
23.14.1 Detailed Description . . . 133
23.14.2 Enumeration Type Documentation . . . 133
23.14.2.1 hwloc_allow_flags_e . . . 133
23.14.2.2 hwloc_restrict_flags_e . . . 133

23.14.3 Function Documentation . . . 134
23.14.3.1 hwloc_obj_add_other_obj_sets() . . . 134
23.14.3.2 hwloc_topology_alloc_group_object() . . . 134
23.14.3.3 hwloc_topology_allow() . . . 135
23.14.3.4 hwloc_topology_free_group_object() . . . 135
23.14.3.5 hwloc_topology_insert_group_object() . . . 135
23.14.3.6 hwloc_topology_insert_misc_object() . . . 136
23.14.3.7 hwloc_topology_refresh() . . . 137
23.14.3.8 hwloc_topology_restrict() . . . 137
23.15 Kinds of object Type . . . 138
23.15.1 Detailed Description . . . 138
23.15.2 Function Documentation . . . 138
23.15.2.1 hwloc_obj_type_is_cache() . . . 138
23.15.2.2 hwloc_obj_type_is_dcache() . . . 138
23.15.2.3 hwloc_obj_type_is_icache() . . . 138
23.15.2.4 hwloc_obj_type_is_io() . . . 139
23.15.2.5 hwloc_obj_type_is_memory() . . . 139
23.15.2.6 hwloc_obj_type_is_normal() . . . 139
23.16 Finding Objects inside a CPU set . . . 140
23.16.1 Detailed Description . . . 140
23.16.2 Function Documentation . . . 140
23.16.2.1 hwloc_get_first_largest_obj_inside_cpuset() . . . 140
23.16.2.2 hwloc_get_largest_objs_inside_cpuset() . . . 140
23.16.2.3 hwloc_get_nbobjs_inside_cpuset_by_depth() . . . 141
23.16.2.4 hwloc_get_nbobjs_inside_cpuset_by_type() . . . 141
23.16.2.5 hwloc_get_next_obj_inside_cpuset_by_depth() . . . 141
23.16.2.6 hwloc_get_next_obj_inside_cpuset_by_type() . . . 142
23.16.2.7 hwloc_get_obj_index_inside_cpuset() . . . 142
23.16.2.8 hwloc_get_obj_inside_cpuset_by_depth() . . . 142
23.16.2.9 hwloc_get_obj_inside_cpuset_by_type() . . . 143
23.17 Finding Objects covering at least CPU set . . . 144
23.17.1 Detailed Description . . . 144
23.17.2 Function Documentation . . . 144
23.17.2.1 hwloc_get_child_covering_cpuset() . . . 144
23.17.2.2 hwloc_get_next_obj_covering_cpuset_by_depth() . . . 144
23.17.2.3 hwloc_get_next_obj_covering_cpuset_by_type() . . . 145
23.17.2.4 hwloc_get_obj_covering_cpuset() . . . 145
23.18 Looking at Ancestor and Child Objects . . . 146
23.18.1 Detailed Description . . . 146
23.18.2 Function Documentation . . . 146
23.18.2.1 hwloc_get_ancestor_obj_by_depth() . . . 146
23.18.2.2 hwloc_get_ancestor_obj_by_type() . . . 146

23.18.2.3 hwloc_get_common_ancestor_obj() . . . 147
23.18.2.4 hwloc_get_next_child() . . . 147
23.18.2.5 hwloc_obj_is_in_subtree() . . . 147
23.19 Looking at Cache Objects . . . 148
23.19.1 Detailed Description . . . 148
23.19.2 Function Documentation . . . 148
23.19.2.1 hwloc_get_cache_covering_cpuset() . . . 148
23.19.2.2 hwloc_get_cache_type_depth() . . . 148
23.19.2.3 hwloc_get_shared_cache_covering_obj() . . . 148
23.20 Finding objects, miscellaneous helpers . . . 149
23.20.1 Detailed Description . . . 149
23.20.2 Function Documentation . . . 149
23.20.2.1 hwloc_bitmap_singlify_per_core() . . . 149
23.20.2.2 hwloc_get_closest_objs() . . . 149
23.20.2.3 hwloc_get_numanode_obj_by_os_index() . . . 150
23.20.2.4 hwloc_get_obj_below_array_by_type() . . . 150
23.20.2.5 hwloc_get_obj_below_by_type() . . . 150
23.20.2.6 hwloc_get_obj_with_same_locality() . . . 151
23.20.2.7 hwloc_get_pu_obj_by_os_index() . . . 151
23.21 Distributing items over a topology . . . 152
23.21.1 Detailed Description . . . 152
23.21.2 Enumeration Type Documentation . . . 152
23.21.2.1 hwloc_distrib_flags_e . . . 152
23.21.3 Function Documentation . . . 152
23.21.3.1 hwloc_distrib() . . . 152
23.22 CPU and node sets of entire topologies . . . 154
23.22.1 Detailed Description . . . 154
23.22.2 Function Documentation . . . 154
23.22.2.1 hwloc_topology_get_allowed_cpuset() . . . 154
23.22.2.2 hwloc_topology_get_allowed_nodeset() . . . 154
23.22.2.3 hwloc_topology_get_complete_cpuset() . . . 155
23.22.2.4 hwloc_topology_get_complete_nodeset() . . . 155
23.22.2.5 hwloc_topology_get_topology_cpuset() . . . 155
23.22.2.6 hwloc_topology_get_topology_nodeset() . . . 156
23.23 Converting between CPU sets and node sets . . . 157
23.23.1 Detailed Description . . . 157
23.23.2 Function Documentation . . . 157
23.23.2.1 hwloc_cpuset_from_nodeset() . . . 157
23.23.2.2 hwloc_cpuset_to_nodeset() . . . 157
23.24 Finding I/O objects . . . 158
23.24.1 Detailed Description . . . 158
23.24.2 Function Documentation . . . 158

23.24.2.1 hwloc_bridge_covers_pcibus() . . . 158
23.24.2.2 hwloc_get_next_bridge() . . . 158
23.24.2.3 hwloc_get_next_osdev() . . . 158
23.24.2.4 hwloc_get_next_pcidev() . . . 159
23.24.2.5 hwloc_get_non_io_ancestor_obj() . . . 159
23.24.2.6 hwloc_get_pcidev_by_busid() . . . 159
23.24.2.7 hwloc_get_pcidev_by_busidstring() . . . 159
23.25 The bitmap API . . . 160
23.25.1 Detailed Description . . . 161
23.25.2 Macro Definition Documentation . . . 161
23.25.2.1 hwloc_bitmap_foreach_begin . . . 161
23.25.2.2 hwloc_bitmap_foreach_end . . . 161
23.25.3 Typedef Documentation . . . 162
23.25.3.1 hwloc_bitmap_t . . . 162
23.25.3.2 hwloc_const_bitmap_t . . . 162
23.25.4 Function Documentation . . . 162
23.25.4.1 hwloc_bitmap_allbut() . . . 162
23.25.4.2 hwloc_bitmap_alloc() . . . 162
23.25.4.3 hwloc_bitmap_alloc_full() . . . 162
23.25.4.4 hwloc_bitmap_and() . . . 162
23.25.4.5 hwloc_bitmap_andnot() . . . 163
23.25.4.6 hwloc_bitmap_asprintf() . . . 163
23.25.4.7 hwloc_bitmap_clr() . . . 163
23.25.4.8 hwloc_bitmap_clr_range() . . . 163
23.25.4.9 hwloc_bitmap_compare() . . . 163
23.25.4.10 hwloc_bitmap_compare_first() . . . 164
23.25.4.11 hwloc_bitmap_copy() . . . 164
23.25.4.12 hwloc_bitmap_dup() . . . 164
23.25.4.13 hwloc_bitmap_fill() . . . 164
23.25.4.14 hwloc_bitmap_first() . . . 164
23.25.4.15 hwloc_bitmap_first_unset() . . . 165
23.25.4.16 hwloc_bitmap_free() . . . 165
23.25.4.17 hwloc_bitmap_from_ith_ulong() . . . 165
23.25.4.18 hwloc_bitmap_from_ulong() . . . 165
23.25.4.19 hwloc_bitmap_from_ulongs() . . . 165
23.25.4.20 hwloc_bitmap_intersects() . . . 165
23.25.4.21 hwloc_bitmap_isequal() . . . 166
23.25.4.22 hwloc_bitmap_isfull() . . . 166
23.25.4.23 hwloc_bitmap_isincluded() . . . 166
23.25.4.24 hwloc_bitmap_isset() . . . 166
23.25.4.25 hwloc_bitmap_iszero() . . . 166
23.25.4.26 hwloc_bitmap_last() . . . 167

23.25.4.27 hwloc_bitmap_last_unset() . . . 167
23.25.4.28 hwloc_bitmap_list_asprintf() . . . 167
23.25.4.29 hwloc_bitmap_list_snprintf() . . . 167
23.25.4.30 hwloc_bitmap_list_sscanf() . . . 167
23.25.4.31 hwloc_bitmap_next() . . . 168
23.25.4.32 hwloc_bitmap_next_unset() . . . 168
23.25.4.33 hwloc_bitmap_not() . . . 168
23.25.4.34 hwloc_bitmap_nr_ulongs() . . . 168
23.25.4.35 hwloc_bitmap_only() . . . 169
23.25.4.36 hwloc_bitmap_or() . . . 169
23.25.4.37 hwloc_bitmap_set() . . . 169
23.25.4.38 hwloc_bitmap_set_ith_ulong() . . . 169
23.25.4.39 hwloc_bitmap_set_range() . . . 169
23.25.4.40 hwloc_bitmap_singlify() . . . 169
23.25.4.41 hwloc_bitmap_snprintf() . . . 170
23.25.4.42 hwloc_bitmap_sscanf() . . . 170
23.25.4.43 hwloc_bitmap_taskset_asprintf() . . . 170
23.25.4.44 hwloc_bitmap_taskset_snprintf() . . . 170
23.25.4.45 hwloc_bitmap_taskset_sscanf() . . . 171
23.25.4.46 hwloc_bitmap_to_ith_ulong() . . . 171
23.25.4.47 hwloc_bitmap_to_ulong() . . . 171
23.25.4.48 hwloc_bitmap_to_ulongs() . . . 171
23.25.4.49 hwloc_bitmap_weight() . . . 171
23.25.4.50 hwloc_bitmap_xor() . . . 171
23.25.4.51 hwloc_bitmap_zero() . . . 172
23.26 Exporting Topologies to XML . . . 173
23.26.1 Detailed Description . . . 173
23.26.2 Enumeration Type Documentation . . . 173
23.26.2.1 hwloc_topology_export_xml_flags_e . . . 173
23.26.3 Function Documentation . . . 173
23.26.3.1 hwloc_export_obj_userdata() . . . 173
23.26.3.2 hwloc_export_obj_userdata_base64() . . . 174
23.26.3.3 hwloc_free_xmlbuffer() . . . 174
23.26.3.4 hwloc_topology_export_xml() . . . 174
23.26.3.5 hwloc_topology_export_xmlbuffer() . . . 175
23.26.3.6 hwloc_topology_set_userdata_export_callback() . . . 175
23.26.3.7 hwloc_topology_set_userdata_import_callback() . . . 176
23.27 Exporting Topologies to Synthetic . . . 177
23.27.1 Detailed Description . . . 177
23.27.2 Enumeration Type Documentation . . . 177
23.27.2.1 hwloc_topology_export_synthetic_flags_e . . . 177
23.27.3 Function Documentation . . . 177

23.27.3.1 hwloc_topology_export_synthetic() . . . 177
23.28 Retrieve distances between objects . . . 179
23.28.1 Detailed Description . . . 179
23.28.2 Enumeration Type Documentation . . . 179
23.28.2.1 hwloc_distances_kind_e . . . 179
23.28.2.2 hwloc_distances_transform_e . . . 180
23.28.3 Function Documentation . . . 181
23.28.3.1 hwloc_distances_get() . . . 181
23.28.3.2 hwloc_distances_get_by_depth() . . . 181
23.28.3.3 hwloc_distances_get_by_name() . . . 181
23.28.3.4 hwloc_distances_get_by_type() . . . 182
23.28.3.5 hwloc_distances_get_name() . . . 182
23.28.3.6 hwloc_distances_release() . . . 182
23.28.3.7 hwloc_distances_transform() . . . 182
23.29 Helpers for consulting distance matrices . . . 184
23.29.1 Detailed Description . . . 184
23.29.2 Function Documentation . . . 184
23.29.2.1 hwloc_distances_obj_index() . . . 184
23.29.2.2 hwloc_distances_obj_pair_values() . . . 184
23.30 Add distances between objects . . . 185
23.30.1 Detailed Description . . . 185
23.30.2 Typedef Documentation . . . 185
23.30.2.1 hwloc_distances_add_handle_t . . . 185
23.30.3 Enumeration Type Documentation . . . 185
23.30.3.1 hwloc_distances_add_flag_e . . . 185
23.30.4 Function Documentation . . . 186
23.30.4.1 hwloc_distances_add_commit() . . . 186
23.30.4.2 hwloc_distances_add_create() . . . 186
23.30.4.3 hwloc_distances_add_values() . . . 187
23.31 Remove distances between objects . . . 188
23.31.1 Detailed Description . . . 188
23.31.2 Function Documentation . . . 188
23.31.2.1 hwloc_distances_release_remove() . . . 188
23.31.2.2 hwloc_distances_remove() . . . 188
23.31.2.3 hwloc_distances_remove_by_depth() . . . 188
23.31.2.4 hwloc_distances_remove_by_type() . . . 188
23.32 Comparing memory node attributes for finding where to allocate on . . . 190
23.32.1 Detailed Description . . . 190
23.32.2 Typedef Documentation . . . 191
23.32.2.1 hwloc_memattr_id_t . . . 191
23.32.3 Enumeration Type Documentation . . . 191
23.32.3.1 hwloc_local_numanode_flag_e . . . 191

23.32.3.2 hwloc_location_type_e . . . 191
23.32.3.3 hwloc_memattr_id_e . . . 192
23.32.4 Function Documentation . . . 193
23.32.4.1 hwloc_get_local_numanode_objs() . . . 193
23.32.4.2 hwloc_memattr_get_best_initiator() . . . 193
23.32.4.3 hwloc_memattr_get_best_target() . . . 194
23.32.4.4 hwloc_memattr_get_by_name() . . . 194
23.32.4.5 hwloc_memattr_get_value() . . . 195
23.33 Managing memory attributes . . . 196
23.33.1 Detailed Description . . . 196
23.33.2 Enumeration Type Documentation . . . 196
23.33.2.1 hwloc_memattr_flag_e . . . 196
23.33.3 Function Documentation . . . 196
23.33.3.1 hwloc_memattr_get_flags() . . . 196
23.33.3.2 hwloc_memattr_get_initiators() . . . 197
23.33.3.3 hwloc_memattr_get_name() . . . 197
23.33.3.4 hwloc_memattr_get_targets() . . . 197
23.33.3.5 hwloc_memattr_register() . . . 198
23.33.3.6 hwloc_memattr_set_value() . . . 198
23.34 Kinds of CPU cores . . . 200
23.34.1 Detailed Description . . . 200
23.34.2 Function Documentation . . . 200
23.34.2.1 hwloc_cpukinds_get_by_cpuset() . . . 200
23.34.2.2 hwloc_cpukinds_get_info() . . . 201
23.34.2.3 hwloc_cpukinds_get_nr() . . . 201
23.34.2.4 hwloc_cpukinds_register() . . . 201
23.35 Linux-specific helpers . . . 203
23.35.1 Detailed Description . . . 203
23.35.2 Function Documentation . . . 203
23.35.2.1 hwloc_linux_get_tid_cpubind() . . . 203
23.35.2.2 hwloc_linux_get_tid_last_cpu_location() . . . 203
23.35.2.3 hwloc_linux_read_path_as_cpumask() . . . 204
23.35.2.4 hwloc_linux_set_tid_cpubind() . . . 204
23.36 Interoperability with Linux libnuma unsigned long masks . . . 205
23.36.1 Detailed Description . . . 205
23.36.2 Function Documentation . . . 205
23.36.2.1 hwloc_cpuset_from_linux_libnuma_ulongs() . . . 205
23.36.2.2 hwloc_cpuset_to_linux_libnuma_ulongs() . . . 205
23.36.2.3 hwloc_nodeset_from_linux_libnuma_ulongs() . . . 206
23.36.2.4 hwloc_nodeset_to_linux_libnuma_ulongs() . . . 206
23.37 Interoperability with Linux libnuma bitmask . . . 207
23.37.1 Detailed Description . . . 207

23.37.2 Function Documentation . . . 207
23.37.2.1 hwloc_cpuset_from_linux_libnuma_bitmask() . . . 207
23.37.2.2 hwloc_cpuset_to_linux_libnuma_bitmask() . . . 207
23.37.2.3 hwloc_nodeset_from_linux_libnuma_bitmask() . . . 208
23.37.2.4 hwloc_nodeset_to_linux_libnuma_bitmask() . . . 208
23.38 Windows-specific helpers . . . 209
23.38.1 Detailed Description . . . 209
23.38.2 Function Documentation . . . 209
23.38.2.1 hwloc_windows_get_nr_processor_groups() . . . 209
23.38.2.2 hwloc_windows_get_processor_group_cpuset() . . . 209
23.39 Interoperability with glibc sched affinity . . . 210
23.39.1 Detailed Description . . . 210
23.39.2 Function Documentation . . . 210
23.39.2.1 hwloc_cpuset_from_glibc_sched_affinity() . . . 210
23.39.2.2 hwloc_cpuset_to_glibc_sched_affinity() . . . 210
23.40 Interoperability with OpenCL . . . 211
23.40.1 Detailed Description . . . 211
23.40.2 Function Documentation . . . 211
23.40.2.1 hwloc_opencl_get_device_cpuset() . . . 211
23.40.2.2 hwloc_opencl_get_device_osdev() . . . 211
23.40.2.3 hwloc_opencl_get_device_osdev_by_index() . . . 212
23.40.2.4 hwloc_opencl_get_device_pci_busid() . . . 212
23.41 Interoperability with the CUDA Driver API . . . 213
23.41.1 Detailed Description . . . 213
23.41.2 Function Documentation . . . 213
23.41.2.1 hwloc_cuda_get_device_cpuset() . . . 213
23.41.2.2 hwloc_cuda_get_device_osdev() . . . 213
23.41.2.3 hwloc_cuda_get_device_osdev_by_index() . . . 214
23.41.2.4 hwloc_cuda_get_device_pci_ids() . . . 214
23.41.2.5 hwloc_cuda_get_device_pcidev() . . . 214
23.42 Interoperability with the CUDA Runtime API . . . 215
23.42.1 Detailed Description . . . 215
23.42.2 Function Documentation . . . 215
23.42.2.1 hwloc_cudart_get_device_cpuset() . . . 215
23.42.2.2 hwloc_cudart_get_device_osdev_by_index() . . . 215
23.42.2.3 hwloc_cudart_get_device_pci_ids() . . . 216
23.42.2.4 hwloc_cudart_get_device_pcidev() . . . 216
23.43 Interoperability with the NVIDIA Management Library . . . 217
23.43.1 Detailed Description . . . 217
23.43.2 Function Documentation . . . 217
23.43.2.1 hwloc_nvml_get_device_cpuset() . . . 217
23.43.2.2 hwloc_nvml_get_device_osdev() . . . 217

23.43.2.3 hwloc_nvml_get_device_osdev_by_index() . . . 218
23.44 Interoperability with the ROCm SMI Management Library . . . 219
23.44.1 Detailed Description . . . 219
23.44.2 Function Documentation . . . 219
23.44.2.1 hwloc_rsmi_get_device_cpuset() . . . 219
23.44.2.2 hwloc_rsmi_get_device_osdev() . . . 219
23.44.2.3 hwloc_rsmi_get_device_osdev_by_index() . . . 220
23.45 Interoperability with the oneAPI Level Zero interface. . . . 221
23.45.1 Detailed Description . . . 221
23.45.2 Function Documentation . . . 221
23.45.2.1 hwloc_levelzero_get_device_cpuset() . . . 221
23.45.2.2 hwloc_levelzero_get_device_osdev() . . . 221
23.46 Interoperability with OpenGL displays . . . 222
23.46.1 Detailed Description . . . 222
23.46.2 Function Documentation . . . 222
23.46.2.1 hwloc_gl_get_display_by_osdev() . . . 222
23.46.2.2 hwloc_gl_get_display_osdev_by_name() . . . 222
23.46.2.3 hwloc_gl_get_display_osdev_by_port_device() . . . 223
23.47 Interoperability with OpenFabrics . . . 224
23.47.1 Detailed Description . . . 224
23.47.2 Function Documentation . . . 224
23.47.2.1 hwloc_ibv_get_device_cpuset() . . . 224
23.47.2.2 hwloc_ibv_get_device_osdev() . . . 224
23.47.2.3 hwloc_ibv_get_device_osdev_by_name() . . . 225
23.48 Topology differences . . . 226
23.48.1 Detailed Description . . . 226
23.48.2 Typedef Documentation . . . 226
23.48.2.1 hwloc_topology_diff_obj_attr_type_t . . . 226
23.48.2.2 hwloc_topology_diff_t . . . 227
23.48.2.3 hwloc_topology_diff_type_t . . . 227
23.48.3 Enumeration Type Documentation . . . 227
23.48.3.1 hwloc_topology_diff_apply_flags_e . . . 227
23.48.3.2 hwloc_topology_diff_obj_attr_type_e . . . 227
23.48.3.3 hwloc_topology_diff_type_e . . . 227
23.48.4 Function Documentation . . . 228
23.48.4.1 hwloc_topology_diff_apply() . . . 228
23.48.4.2 hwloc_topology_diff_build() . . . 228
23.48.4.3 hwloc_topology_diff_destroy() . . . 229
23.48.4.4 hwloc_topology_diff_export_xml() . . . 229
23.48.4.5 hwloc_topology_diff_export_xmlbuffer() . . . 229
23.48.4.6 hwloc_topology_diff_load_xml() . . . 229
23.48.4.7 hwloc_topology_diff_load_xmlbuffer() . . . 230

23.49 Sharing topologies between processes . . . 231
23.49.1 Detailed Description . . . 231
23.49.2 Function Documentation . . . 231
23.49.2.1 hwloc_shmem_topology_adopt() . . . 231
23.49.2.2 hwloc_shmem_topology_get_length() . . . 232
23.49.2.3 hwloc_shmem_topology_write() . . . 232
23.50 Components and Plugins: Discovery components . . . 233
23.50.1 Detailed Description . . . 233
23.51 Components and Plugins: Discovery backends . . . 234
23.51.1 Detailed Description . . . 234
23.51.2 Macro Definition Documentation . . . 234
23.51.2.1 HWLOC_BACKEND_PRIVATE_DATA . . . 234
23.51.3 Typedef Documentation . . . 234
23.51.3.1 hwloc_disc_phase_t . . . 234
23.51.4 Enumeration Type Documentation . . . 234
23.51.4.1 hwloc_disc_phase_e . . . 235
23.51.4.2 hwloc_disc_status_flag_e . . . 235
23.51.5 Function Documentation . . . 235
23.51.5.1 hwloc_backend_alloc() . . . 235
23.51.5.2 hwloc_backend_enable() . . . 235
23.52 Components and Plugins: Generic components . . . 236
23.52.1 Detailed Description . . . 236
23.52.2 Typedef Documentation . . . 236
23.52.2.1 hwloc_component_type_t . . . 236
23.52.3 Enumeration Type Documentation . . . 236
23.52.3.1 hwloc_component_type_e . . . 236
23.53 Components and Plugins: Core functions to be used by components . . . 237
23.53.1 Detailed Description . . . 237
23.53.2 Macro Definition Documentation . . . 237
23.53.2.1 HWLOC_SHOW_ALL_ERRORS . . . 237
23.53.2.2 HWLOC_SHOW_CRITICAL_ERRORS . . . 237
23.53.3 Function Documentation . . . 237
23.53.3.1 hwloc__insert_object_by_cpuset() . . . 237
23.53.3.2 hwloc_alloc_setup_object() . . . 238
23.53.3.3 hwloc_hide_errors() . . . 238
23.53.3.4 hwloc_insert_object_by_parent() . . . 238
23.53.3.5 hwloc_obj_add_children_sets() . . . 238
23.53.3.6 hwloc_plugin_check_namespace() . . . 238
23.53.3.7 hwloc_topology_reconnect() . . . 239
23.54 Components and Plugins: Filtering objects . . . 240
23.54.1 Detailed Description . . . 240
23.54.2 Function Documentation . . . 240

23.54.2.1 hwloc_filter_check_keep_object() . . . 240
23.54.2.2 hwloc_filter_check_keep_object_type() . . . 240
23.54.2.3 hwloc_filter_check_osdev_subtype_important() . . . 240
23.54.2.4 hwloc_filter_check_pcidev_subtype_important() . . . 240
23.55 Components and Plugins: helpers for PCI discovery . . . 242
23.55.1 Detailed Description . . . 242
23.55.2 Function Documentation . . . 242
23.55.2.1 hwloc_pcidisc_check_bridge_type() . . . 242
23.55.2.2 hwloc_pcidisc_find_bridge_buses() . . . 242
23.55.2.3 hwloc_pcidisc_find_cap() . . . 242
23.55.2.4 hwloc_pcidisc_find_linkspeed() . . . 242
23.55.2.5 hwloc_pcidisc_tree_attach() . . . 243
23.55.2.6 hwloc_pcidisc_tree_insert_by_busid() . . . 243
23.56 Components and Plugins: finding PCI objects during other discoveries . . . 244
23.56.1 Detailed Description . . . 244
23.56.2 Typedef Documentation . . . 244
23.56.2.1 hwloc_backend_distances_add_handle_t . . . 244
23.56.3 Function Documentation . . . 244
23.56.3.1 hwloc_backend_distances_add_commit() . . . 244
23.56.3.2 hwloc_backend_distances_add_create() . . . 244
23.56.3.3 hwloc_backend_distances_add_values() . . . 245
23.56.3.4 hwloc_pci_find_by_busid() . . . 245
23.56.3.5 hwloc_pci_find_parent_by_busid() . . . 245

24 Data Structure Documentation **247**
24.1 hwloc_backend Struct Reference . . . 247
24.1.1 Detailed Description . . . 247
24.1.2 Field Documentation . . . 247
24.1.2.1 disable . . . 247
24.1.2.2 discover . . . 247
24.1.2.3 flags . . . 248
24.1.2.4 get_pci_busid_cpuset . . . 248
24.1.2.5 is_thissystem . . . 248
24.1.2.6 phases . . . 248
24.2 hwloc_obj_attr_u::hwloc_bridge_attr_s Struct Reference . . . 248
24.2.1 Detailed Description . . . 248
24.2.2 Field Documentation . . . 249
24.2.2.1 depth . . . 249
24.2.2.2 domain . . . 249
24.2.2.3 downstream . . . 249
24.2.2.4 downstream_type . . . 249
24.2.2.5 pci [1/2] . . . 249

24.2.2.6 pci [2/2] . . . 249
24.2.2.7 secondary_bus . . . 249
24.2.2.8 subordinate_bus . . . 249
24.2.2.9 upstream . . . 249
24.2.2.10 upstream_type . . . 249
24.3 hwloc_obj_attr_u::hwloc_cache_attr_s Struct Reference . . . 250
24.3.1 Detailed Description . . . 250
24.3.2 Field Documentation . . . 250
24.3.2.1 associativity . . . 250
24.3.2.2 depth . . . 250
24.3.2.3 linesize . . . 250
24.3.2.4 size . . . 250
24.3.2.5 type . . . 250
24.4 hwloc_cl_device_pci_bus_info_khr Struct Reference . . . 250
24.4.1 Field Documentation . . . 251
24.4.1.1 pci_bus . . . 251
24.4.1.2 pci_device . . . 251
24.4.1.3 pci_domain . . . 251
24.4.1.4 pci_function . . . 251
24.5 hwloc_cl_device_topology_amd Union Reference . . . 251
24.5.1 Field Documentation . . . 251
24.5.1.1 bus . . . 252
24.5.1.2 data . . . 252
24.5.1.3 device . . . 252
24.5.1.4 function . . . 252
24.5.1.5 pcie . . . 252
24.5.1.6 raw . . . 252
24.5.1.7 type . . . 252
24.5.1.8 unused . . . 252
24.6 hwloc_component Struct Reference . . . 252
24.6.1 Detailed Description . . . 252
24.6.2 Field Documentation . . . 253
24.6.2.1 abi . . . 253
24.6.2.2 data . . . 253
24.6.2.3 finalize . . . 253
24.6.2.4 flags . . . 253
24.6.2.5 init . . . 253
24.6.2.6 type . . . 253
24.7 hwloc_disc_component Struct Reference . . . 254
24.7.1 Detailed Description . . . 254
24.7.2 Field Documentation . . . 254
24.7.2.1 enabled_by_default . . . 254

24.7.2.2 excluded_phases . . . 254
24.7.2.3 instantiate . . . 254
24.7.2.4 name . . . 254
24.7.2.5 phases . . . 254
24.7.2.6 priority . . . 255
24.8 hwloc_disc_status Struct Reference . . . 255
24.8.1 Detailed Description . . . 255
24.8.2 Field Documentation . . . 255
24.8.2.1 excluded_phases . . . 255
24.8.2.2 flags . . . 255
24.8.2.3 phase . . . 255
24.9 hwloc_distances_s Struct Reference . . . 255
24.9.1 Detailed Description . . . 256
24.9.2 Field Documentation . . . 256
24.9.2.1 kind . . . 256
24.9.2.2 nbobjs . . . 256
24.9.2.3 objs . . . 256
24.9.2.4 values . . . 256
24.10 hwloc_obj_attr_u::hwloc_group_attr_s Struct Reference . . . 256
24.10.1 Detailed Description . . . 257
24.10.2 Field Documentation . . . 257
24.10.2.1 depth . . . 257
24.10.2.2 dont_merge . . . 257
24.10.2.3 kind . . . 257
24.10.2.4 subkind . . . 257
24.11 hwloc_info_s Struct Reference . . . 257
24.11.1 Detailed Description . . . 257
24.11.2 Field Documentation . . . 258
24.11.2.1 name . . . 258
24.11.2.2 value . . . 258
24.12 hwloc_infos_s Struct Reference . . . 258
24.12.1 Detailed Description . . . 258
24.12.2 Field Documentation . . . 258
24.12.2.1 array . . . 258
24.12.2.2 count . . . 258
24.13 hwloc_location Struct Reference . . . 258
24.13.1 Detailed Description . . . 259
24.13.2 Field Documentation . . . 259
24.13.2.1 location . . . 259
24.13.2.2 type . . . 259
24.14 hwloc_location::hwloc_location_u Union Reference . . . 259
24.14.1 Detailed Description . . . 259

24.14.2 Field Documentation . . . 259
24.14.2.1 cpuset . . . 259
24.14.2.2 object . . . 259
24.15 hwloc_obj_attr_u::hwloc_numanode_attr_s::hwloc_memory_page_type_s Struct Reference . . . 260
24.15.1 Detailed Description . . . 260
24.15.2 Field Documentation . . . 260
24.15.2.1 count . . . 260
24.15.2.2 size . . . 260
24.16 hwloc_obj_attr_u::hwloc_numanode_attr_s Struct Reference . . . 260
24.16.1 Detailed Description . . . 260
24.16.2 Field Documentation . . . 260
24.16.2.1 local_memory . . . 261
24.16.2.2 page_types . . . 261
24.16.2.3 page_types_len . . . 261
24.17 hwloc_obj Struct Reference . . . 261
24.17.1 Detailed Description . . . 262
24.17.2 Field Documentation . . . 262
24.17.2.1 arity . . . 262
24.17.2.2 attr . . . 262
24.17.2.3 children . . . 262
24.17.2.4 complete_cpuset . . . 262
24.17.2.5 complete_nodeset . . . 263
24.17.2.6 cpuset . . . 263
24.17.2.7 depth . . . 263
24.17.2.8 first_child . . . 263
24.17.2.9 gp_index . . . 263
24.17.2.10 infos . . . 264
24.17.2.11 io_arity . . . 264
24.17.2.12 io_first_child . . . 264
24.17.2.13 last_child . . . 264
24.17.2.14 logical_index . . . 264
24.17.2.15 memory_arity . . . 264
24.17.2.16 memory_first_child . . . 264
24.17.2.17 misc_arity . . . 264
24.17.2.18 misc_first_child . . . 264
24.17.2.19 name . . . 265
24.17.2.20 next_cousin . . . 265
24.17.2.21 next_sibling . . . 265
24.17.2.22 nodeset . . . 265
24.17.2.23 os_index . . . 265
24.17.2.24 parent . . . 265
24.17.2.25 prev_cousin . . . 265

24.17.2.26 prev_sibling . . . 266
24.17.2.27 sibling_rank . . . 266
24.17.2.28 subtype . . . 266
24.17.2.29 symmetric_subtree . . . 266
24.17.2.30 total_memory . . . 266
24.17.2.31 type . . . 266
24.17.2.32 userdata . . . 266
24.18 hwloc_obj_attr_u Union Reference . . . 266
24.18.1 Detailed Description . . . 267
24.18.2 Field Documentation . . . 267
24.18.2.1 bridge . . . 267
24.18.2.2 cache . . . 267
24.18.2.3 group . . . 267
24.18.2.4 numanode . . . 267
24.18.2.5 osdev . . . 267
24.18.2.6 pcidev . . . 267
24.19 hwloc_obj_attr_u::hwloc_osdev_attr_s Struct Reference . . . 267
24.19.1 Detailed Description . . . 268
24.19.2 Field Documentation . . . 268
24.19.2.1 type . . . 268
24.20 hwloc_obj_attr_u::hwloc_pcidev_attr_s Struct Reference . . . 268
24.20.1 Detailed Description . . . 268
24.20.2 Field Documentation . . . 268
24.20.2.1 bus . . . 268
24.20.2.2 class_id . . . 268
24.20.2.3 dev . . . 269
24.20.2.4 device_id . . . 269
24.20.2.5 domain . . . 269
24.20.2.6 func . . . 269
24.20.2.7 linkspeed . . . 269
24.20.2.8 prog_if . . . 269
24.20.2.9 revision . . . 269
24.20.2.10 subdevice_id . . . 269
24.20.2.11 subvendor_id . . . 269
24.20.2.12 vendor_id . . . 270
24.21 hwloc_topology_cpubind_support Struct Reference . . . 270
24.21.1 Detailed Description . . . 270
24.21.2 Field Documentation . . . 270
24.21.2.1 get_proc_cpubind . . . 270
24.21.2.2 get_proc_last_cpu_location . . . 270
24.21.2.3 get_thisproc_cpubind . . . 270
24.21.2.4 get_thisproc_last_cpu_location . . . 270

24.21.2.5 get_thisthread_cpubind . . . 271
24.21.2.6 get_thisthread_last_cpu_location . . . 271
24.21.2.7 get_thread_cpubind . . . 271
24.21.2.8 set_proc_cpubind . . . 271
24.21.2.9 set_thisproc_cpubind . . . 271
24.21.2.10 set_thisthread_cpubind . . . 271
24.21.2.11 set_thread_cpubind . . . 271
24.22 hwloc_topology_diff_u::hwloc_topology_diff_generic_s Struct Reference . . . 271
24.22.1 Field Documentation . . . 271
24.22.1.1 next . . . 271
24.22.1.2 type . . . 272
24.23 hwloc_topology_diff_obj_attr_u::hwloc_topology_diff_obj_attr_generic_s Struct Reference . . . 272
24.23.1 Field Documentation . . . 272
24.23.1.1 type . . . 272
24.24 hwloc_topology_diff_u::hwloc_topology_diff_obj_attr_s Struct Reference . . . 272
24.24.1 Field Documentation . . . 272
24.24.1.1 diff . . . 272
24.24.1.2 next . . . 272
24.24.1.3 obj_depth . . . 273
24.24.1.4 obj_index . . . 273
24.24.1.5 type . . . 273
24.25 hwloc_topology_diff_obj_attr_u::hwloc_topology_diff_obj_attr_string_s Struct Reference . . . 273
24.25.1 Detailed Description . . . 273
24.25.2 Field Documentation . . . 273
24.25.2.1 name . . . 273
24.25.2.2 newvalue . . . 273
24.25.2.3 oldvalue . . . 273
24.25.2.4 type . . . 273
24.26 hwloc_topology_diff_obj_attr_u Union Reference . . . 274
24.26.1 Detailed Description . . . 274
24.26.2 Field Documentation . . . 274
24.26.2.1 generic . . . 274
24.26.2.2 string . . . 274
24.26.2.3 uint64 . . . 274
24.27 hwloc_topology_diff_obj_attr_u::hwloc_topology_diff_obj_attr_uint64_s Struct Reference . . . 274
24.27.1 Detailed Description . . . 275
24.27.2 Field Documentation . . . 275
24.27.2.1 index . . . 275
24.27.2.2 newvalue . . . 275
24.27.2.3 oldvalue . . . 275
24.27.2.4 type . . . 275
24.28 hwloc_topology_diff_u::hwloc_topology_diff_too_complex_s Struct Reference . . . 275

24.28.1 Field Documentation . . . 275
24.28.1.1 next . . . 275
24.28.1.2 obj_depth . . . 275
24.28.1.3 obj_index . . . 276
24.28.1.4 type . . . 276
24.29 hwloc_topology_diff_u Union Reference . . . 276
24.29.1 Detailed Description . . . 276
24.29.2 Field Documentation . . . 276
24.29.2.1 generic . . . 276
24.29.2.2 obj_attr . . . 276
24.29.2.3 too_complex . . . 276
24.30 hwloc_topology_discovery_support Struct Reference . . . 276
24.30.1 Detailed Description . . . 277
24.30.2 Field Documentation . . . 277
24.30.2.1 cpukind_efficiency . . . 277
24.30.2.2 disallowed_numa . . . 277
24.30.2.3 disallowed_pu . . . 277
24.30.2.4 numa . . . 277
24.30.2.5 numa_memory . . . 277
24.30.2.6 pu . . . 277
24.31 hwloc_topology_membind_support Struct Reference . . . 277
24.31.1 Detailed Description . . . 278
24.31.2 Field Documentation . . . 278
24.31.2.1 alloc_membind . . . 278
24.31.2.2 bind_membind . . . 278
24.31.2.3 firsttouch_membind . . . 278
24.31.2.4 get_area_membind . . . 278
24.31.2.5 get_area_memlocation . . . 278
24.31.2.6 get_proc_membind . . . 278
24.31.2.7 get_thisproc_membind . . . 279
24.31.2.8 get_thisthread_membind . . . 279
24.31.2.9 interleave_membind . . . 279
24.31.2.10 migrate_membind . . . 279
24.31.2.11 nexttouch_membind . . . 279
24.31.2.12 set_area_membind . . . 279
24.31.2.13 set_proc_membind . . . 279
24.31.2.14 set_thisproc_membind . . . 279
24.31.2.15 set_thisthread_membind . . . 279
24.31.2.16 weighted_interleave_membind . . . 279
24.32 hwloc_topology_misc_support Struct Reference . . . 279
24.32.1 Detailed Description . . . 280
24.32.2 Field Documentation . . . 280

24.32.2.1 imported_support 280
24.33 hwloc_topology_support Struct Reference 280
24.33.1 Detailed Description 280
24.33.2 Field Documentation 280
24.33.2.1 cpubind 280
24.33.2.2 discovery 280
24.33.2.3 membind 280
24.33.2.4 misc 280

Chapter 1

Hardware Locality

Portable abstraction of hierarchical architectures for high-performance computing

---

1.1 Table of Contents

- Introduction
  - hwloc Overview
  - Command-line Examples
  - Programming Interface
  - Questions and Bugs
  - History / Credits
- Chapters
  - Installation
  - Compiling software on top of hwloc's C API
  - Terms and Definitions
  - Command-Line Tools
  - Environment Variables
  - CPU and Memory Binding Overview
  - I/O Devices
  - Miscellaneous objects
  - Object attributes
  - Topology Attributes: Distances, Memory Attributes and CPU Kinds
  - Heterogeneous Memory
  - Importing and exporting topologies from/to XML files
  - Synthetic topologies
  - Interoperability With Other Software
  - Thread Safety
  - Components and plugins
  - Embedding hwloc in Other Software
  - Frequently Asked Questions (FAQ)
  - Upgrading to the hwloc 3.0 API

1.2 hwloc Overview

The Hardware Locality (hwloc) software project aims at easing the process of discovering hardware resources in parallel architectures. It offers command-line tools and a C API for consulting these resources, their locality, attributes, and interconnection. hwloc primarily aims at helping high-performance computing (HPC) applications, but is also applicable to any project seeking to exploit code and/or data locality on modern computing platforms.
hwloc provides command line tools and a C API to obtain the hierarchical map of key computing elements within a node, such as: NUMA memory nodes, shared caches, processor packages, dies and cores, processing units (logical processors or "threads") and even I/O devices. hwloc also gathers various attributes such as cache and memory information, and is portable across a variety of different operating systems and platforms.
hwloc primarily aims at helping high-performance computing (HPC) applications, but is also applicable to any project seeking to exploit code and/or data locality on modern computing platforms.
hwloc supports the following operating systems:

- Linux (with knowledge of cgroups and cpusets, memory targets/initiators, etc.) on all supported hardware, including Intel Xeon Phi, ScaleMP vSMP, and NumaScale NumaConnect.
- Solaris (with support for processor sets and logical domains)
- AIX
- Darwin / OS X
- FreeBSD and its variants (such as kFreeBSD/GNU)
- NetBSD
- HP-UX
- Microsoft Windows

Since it uses standard Operating System information, hwloc's support is mostly independant from the processor type (x86, powerpc, ...) and just relies on the Operating System support. The main exception is BSD operating systems (NetBSD, FreeBSD, etc.) because they do not provide support topology information, hence hwloc uses an x86-only CPUID-based backend (which can be used for other OSes too, see the Components and plugins section).
To check whether hwloc works on a particular machine, just try to build it and run `lstopo` or `lstopo-no-graphics`.
If some things do not look right (e.g. bogus or missing cache information), see Questions and Bugs.
hwloc only reports the number of processors on unsupported operating systems; no topology information is available.
For development and debugging purposes, hwloc also offers the ability to work on "fake" topologies:

- Symmetrical tree of resources generated from a list of level arities, see Synthetic topologies.
- Remote machine simulation through the gathering of topology as XML files, see Importing and exporting topologies from/to XML

hwloc can display the topology in a human-readable format, either in graphical mode (X11), or by exporting in one of several different formats, including: plain text, LaTeX tikzpicture, PDF, PNG, and FIG (see Command-line Examples below). Note that some of the export formats require additional support libraries.
hwloc offers a programming interface for manipulating topologies and objects. It also brings a powerful CPU bitmap API that is used to describe topology objects location on physical/logical processors. See the Programming Interface below. It may also be used to binding applications onto certain cores or memory nodes. Several utility programs are also provided to ease command-line manipulation of topology objects, binding of processes, and so on.
Bindings for several other languages are available from the `project website`.

1.3 Command-line Examples

On a 4-package 2-core machine with hyper-threading, the `lstopo` tool may show the following graphical output:

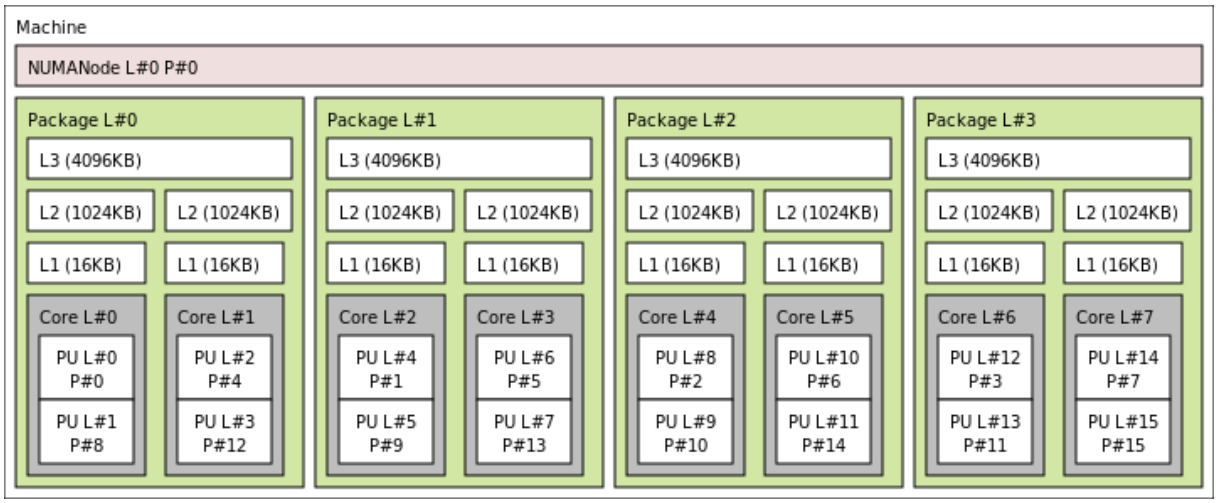

Here's the equivalent output in textual form:

```
Machine
  NUMANode L#0 (P#0)
  Package L#0 + L3 L#0 (4096KB)
    L2 L#0 (1024KB) + L1 L#0 (16KB) + Core L#0
      PU L#0 (P#0)
      PU L#1 (P#8)
    L2 L#1 (1024KB) + L1 L#1 (16KB) + Core L#1
      PU L#2 (P#4)
      PU L#3 (P#12)
  Package L#1 + L3 L#1 (4096KB)
    L2 L#2 (1024KB) + L1 L#2 (16KB) + Core L#2
      PU L#4 (P#1)
      PU L#5 (P#9)
    L2 L#3 (1024KB) + L1 L#3 (16KB) + Core L#3
      PU L#6 (P#5)
      PU L#7 (P#13)
  Package L#2 + L3 L#2 (4096KB)
    L2 L#4 (1024KB) + L1 L#4 (16KB) + Core L#4
      PU L#8 (P#2)
      PU L#9 (P#10)
    L2 L#5 (1024KB) + L1 L#5 (16KB) + Core L#5
      PU L#10 (P#6)
      PU L#11 (P#14)
  Package L#3 + L3 L#3 (4096KB)
    L2 L#6 (1024KB) + L1 L#6 (16KB) + Core L#6
      PU L#12 (P#3)
      PU L#13 (P#11)
    L2 L#7 (1024KB) + L1 L#7 (16KB) + Core L#7
      PU L#14 (P#7)
      PU L#15 (P#15)
```

Note that there is also an equivalent output in XML that is meant for exporting/importing topologies but it is hardly readable to human-beings (see Importing and exporting topologies from/to XML files for details).
On a 4-package 2-core Opteron NUMA machine (with two core cores disallowed by the administrator), the `lstopo` tool may show the following graphical output (with `--disallowed` for displaying disallowed objects):

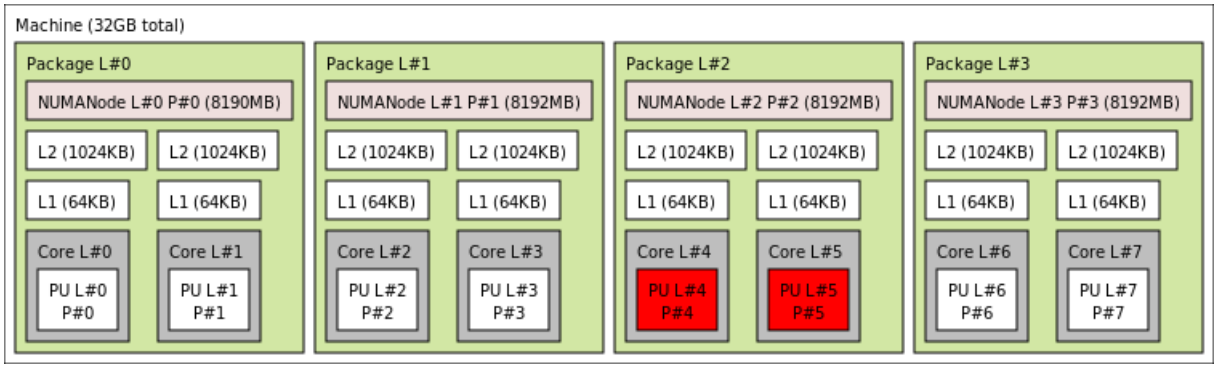

Here's the equivalent output in textual form:

```
Machine (32GB total)
  Package L#0
    NUMANode L#0 (P#0 8190MB)
    L2 L#0 (1024KB) + L1 L#0 (64KB) + Core L#0 + PU L#0 (P#0)
    L2 L#1 (1024KB) + L1 L#1 (64KB) + Core L#1 + PU L#1 (P#1)
  Package L#1
    NUMANode L#1 (P#1 8192MB)
    L2 L#2 (1024KB) + L1 L#2 (64KB) + Core L#2 + PU L#2 (P#2)
    L2 L#3 (1024KB) + L1 L#3 (64KB) + Core L#3 + PU L#3 (P#3)
  Package L#2
    NUMANode L#2 (P#2 8192MB)
    L2 L#4 (1024KB) + L1 L#4 (64KB) + Core L#4 + PU L#4 (P#4)
    L2 L#5 (1024KB) + L1 L#5 (64KB) + Core L#5 + PU L#5 (P#5)
  Package L#3
    NUMANode L#3 (P#3 8192MB)
    L2 L#6 (1024KB) + L1 L#6 (64KB) + Core L#6 + PU L#6 (P#6)
    L2 L#7 (1024KB) + L1 L#7 (64KB) + Core L#7 + PU L#7 (P#7)
```

On a 2-package quad-core Xeon (pre-Nehalem, with 2 dual-core dies into each package):

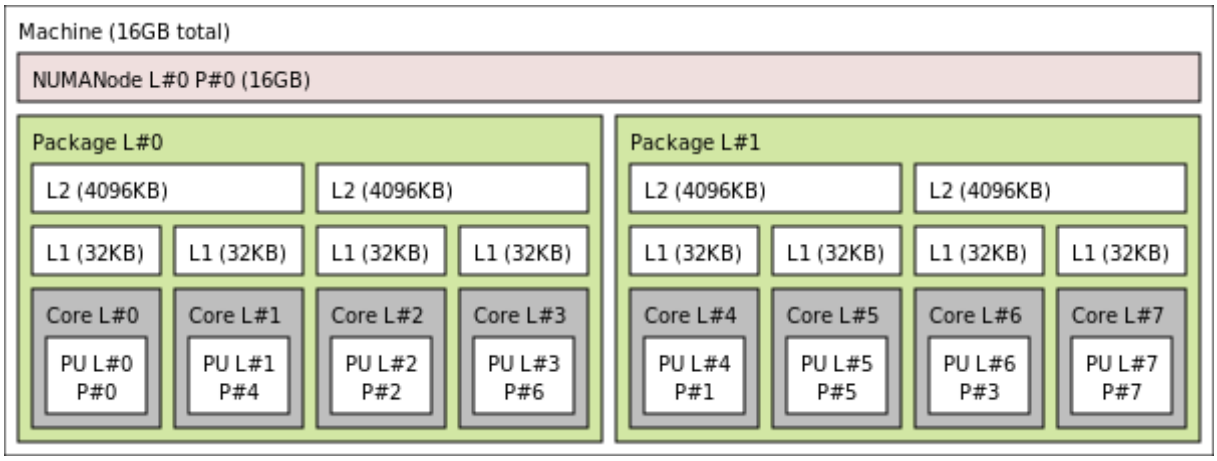

Here's the same output in textual form:

```
Machine (total 16GB)
  NUMANode L#0 (P#0 16GB)
  Package L#0
    L2 L#0 (4096KB)
      L1 L#0 (32KB) + Core L#0 + PU L#0 (P#0)
      L1 L#1 (32KB) + Core L#1 + PU L#1 (P#4)
    L2 L#1 (4096KB)
      L1 L#2 (32KB) + Core L#2 + PU L#2 (P#2)
      L1 L#3 (32KB) + Core L#3 + PU L#3 (P#6)
  Package L#1
    L2 L#2 (4096KB)
      L1 L#4 (32KB) + Core L#4 + PU L#4 (P#1)
      L1 L#5 (32KB) + Core L#5 + PU L#5 (P#5)
    L2 L#3 (4096KB)
      L1 L#6 (32KB) + Core L#6 + PU L#6 (P#3)
      L1 L#7 (32KB) + Core L#7 + PU L#7 (P#7)
```

1.4 Programming Interface

The basic interface is available in hwloc.h. Some higher-level functions are available in hwloc/helper.h to reduce the need to manually manipulate objects and follow links between them. Documentation for all these is provided later in this document. Developers may also want to look at hwloc/inlines.h which contains the actual inline code of some hwloc.h routines, and at this document, which provides good higher-level topology traversal examples.
To precisely define the vocabulary used by hwloc, a Terms and Definitions section is available and should probably be read first.

Each hwloc object contains a cpuset describing the list of processing units that it contains. These bitmaps may be used for CPU binding and Memory binding. hwloc offers an extensive bitmap manipulation interface in hwloc/bitmap.h.
Moreover, hwloc also comes with additional helpers for interoperability with several commonly used environments. See the Interoperability With Other Software section for details.
The complete API documentation is available in a full set of HTML pages, man pages, and self-contained PDF files (formatted for both both US letter and A4 formats) in the source tarball in doc/doxygen-doc/.
NOTE: If you are building the documentation from a Git clone, you will need to have Doxygen and pdflatex installed – the documentation will be built during the normal "make" process. The documentation is installed during "make install" to $prefix/share/doc/hwloc/ and your systems default man page tree (under $prefix, of course).

1.4.1 Portability

Operating System have varying support for CPU and memory binding, e.g. while some Operating Systems provide interfaces for all kinds of CPU and memory bindings, some others provide only interfaces for a limited number of kinds of CPU and memory binding, and some do not provide any binding interface at all. Hwloc's binding functions would then simply return the ENOSYS error (Function not implemented), meaning that the underlying Operating System does not provide any interface for them. CPU binding and Memory binding provide more information on which hwloc binding functions should be preferred because interfaces for them are usually available on the supported Operating Systems.
Similarly, the ability of reporting topology information varies from one platform to another. As shown in Command-line Examples, hwloc can obtain information on a wide variety of hardware topologies. However, some platforms and/or operating system versions will only report a subset of this information. For example, on an PPC64-based system with 8 cores (each with 2 hardware threads) running a default 2.6.18-based kernel from RHEL 5.4, hwloc is only able to glean information about NUMA nodes and processor units (PUs). No information about caches, packages, or cores is available.
Here's the graphical output from lstopo on this platform when Simultaneous Multi-Threading (SMT) is enabled:

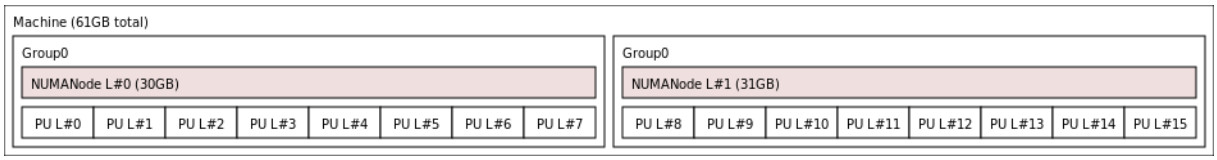

And here's the graphical output from lstopo on this platform when SMT is disabled:

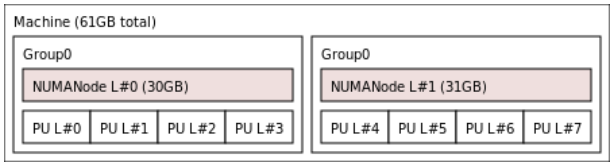

Notice that hwloc only sees half the PUs when SMT is disabled. PU L#6, for example, seems to change location from NUMA node #0 to #1. In reality, no PUs "moved" – they were simply re-numbered when hwloc only saw half as many (see also Logical index in Indexes and Sets). Hence, PU L#6 in the SMT-disabled picture probably corresponds to PU L#12 in the SMT-enabled picture.
This same "PUs have disappeared" effect can be seen on other platforms – even platforms / OSs that provide much more information than the above PPC64 system. This is an unfortunate side-effect of how operating systems report information to hwloc.
Note that upgrading the Linux kernel on the same PPC64 system mentioned above to 2.6.34, hwloc is able to discover all the topology information. The following picture shows the entire topology layout when SMT is enabled:

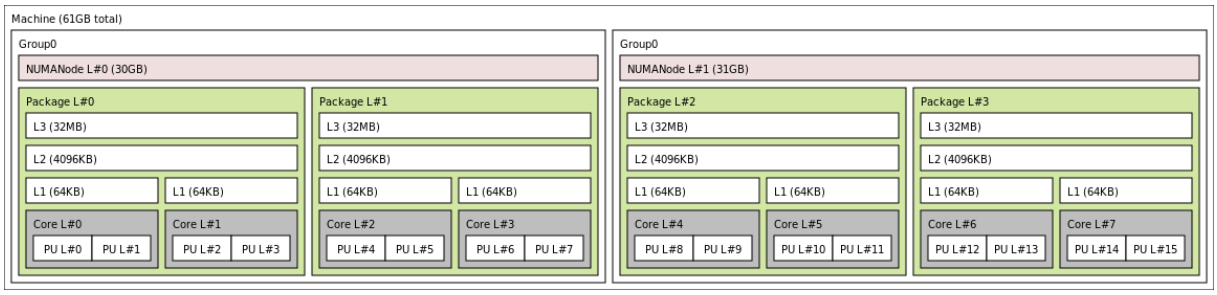

Developers using the hwloc API or XML output for portable applications should therefore be extremely careful to not make any assumptions about the structure of data that is returned. For example, per the above reported PPC topology, it is not safe to assume that PUs will always be descendants of cores.
Additionally, future hardware may insert new topology elements that are not available in this version of hwloc. Long-lived applications that are meant to span multiple different hardware platforms should also be careful about making structure assumptions. For example, a new element may someday exist between a core and a PU.

1.4.2 API Example

The following small C example (available in the source tree as ``doc/examples/hwloc-hello.c'') prints the topology of the machine and performs some thread and memory binding. More examples are available in the doc/examples/ directory of the source tree.

```
/* Example hwloc API program.
 *
 * See other examples under doc/examples/ in the source tree
 * for more details.
 *
 * Copyright © 2009-2016 Inria.  All rights reserved.
 * Copyright © 2009-2011 Université Bordeaux
 * Copyright © 2009-2010 Cisco Systems, Inc.  All rights reserved.
 * See COPYING in top-level directory.
 *
 * hwloc-hello.c
 */
#include "hwloc.h"
#include <errno.h>
#include <stdio.h>
#include <string.h>
static void print_children(hwloc_topology_t topology, hwloc_obj_t obj,
                           int depth)
{
    char type[32], attr[1024];
    unsigned i;
    hwloc_obj_type_snprintf(type, sizeof(type), obj, 0);
    printf("%*s%s", 2*depth, "", type);
    if (obj->os_index != (unsigned) -1)
      printf("#%u", obj->os_index);
    hwloc_obj_attr_snprintf(attr, sizeof(attr), obj, " ", 0);
    if (*attr)
      printf("(%s)", attr);
    printf("\n");
    for (i = 0; i < obj->arity; i++) {
        print_children(topology, obj->children[i], depth + 1);
    }
}
int main(void)
{
    int depth;
    unsigned i, n;
    unsigned long size;
    int levels;
    char string[128];
    int topodepth;
    void *m;
    hwloc_topology_t topology;
    hwloc_cpuset_t cpuset;
    hwloc_obj_t obj;
    /* Allocate and initialize topology object. */
    hwloc_topology_init(&topology);
    /* ... Optionally, put detection configuration here to ignore
       some objects types, define a synthetic topology, etc....

       The default is to detect all the objects of the machine that
       the caller is allowed to access.  See Configure Topology
       Detection. */
    /* Perform the topology detection. */
    hwloc_topology_load(topology);
    /* Optionally, get some additional topology information
       in case we need the topology depth later. */
    topodepth = hwloc_topology_get_depth(topology);
    /*****************************************************************
     * First example:
     * Walk the topology with an array style, from level 0 (always
     * the system level) to the lowest level (always the proc level).
     *****************************************************************/
    for (depth = 0; depth < topodepth; depth++) {
        printf("*** Objects at level %d\n", depth);
        for (i = 0; i < hwloc_get_nbobjs_by_depth(topology, depth);
             i++) {
            hwloc_obj_type_snprintf(string, sizeof(string),
                                    hwloc_get_obj_by_depth(topology, depth, i), 0);
            printf("Index %u: %s\n", i, string);
```

```
        }
    }
    /*****************************************************************
     * Second example:
     * Walk the topology with a tree style.
     *****************************************************************/
    printf("*** Printing overall tree\n");
    print_children(topology, hwloc_get_root_obj(topology), 0);
    /*****************************************************************
     * Third example:
     * Print the number of packages.
     *****************************************************************/
    depth = hwloc_get_type_depth(topology, HWLOC_OBJ_PACKAGE);
    if (depth == HWLOC_TYPE_DEPTH_UNKNOWN) {
        printf("*** The number of packages is unknown\n");
    } else {
        printf("*** %u package(s)\n",
               hwloc_get_nbobjs_by_depth(topology, depth));
    }
    /*****************************************************************
     * Fourth example:
     * Compute the amount of cache that the first logical processor
     * has above it.
     *****************************************************************/
    levels = 0;
    size = 0;
    for (obj = hwloc_get_obj_by_type(topology, HWLOC_OBJ_PU, 0);
         obj;
         obj = obj->parent)
      if (hwloc_obj_type_is_cache(obj->type)) {
        levels++;
        size += obj->attr->cache.size;
      }
    printf("*** Logical processor 0 has %d caches totaling %luKB\n",
           levels, size / 1024);
    /*****************************************************************
     * Fifth example:
     * Bind to only one thread of the last core of the machine.
     *
     * First find out where cores are, or else smaller sets of CPUs if
     * the OS doesn't have the notion of a "core".
     *****************************************************************/
    depth = hwloc_get_type_or_below_depth(topology, HWLOC_OBJ_CORE);
    /* Get last core. */
    obj = hwloc_get_obj_by_depth(topology, depth,
                   hwloc_get_nbobjs_by_depth(topology, depth) - 1);
    if (obj) {
        /* Get a copy of its cpuset that we may modify. */
        cpuset = hwloc_bitmap_dup(obj->cpuset);
        /* Get only one logical processor (in case the core is
           SMT/hyper-threaded). */
        hwloc_bitmap_singlify(cpuset);
        /* And try to bind ourself there. */
        if (hwloc_set_cpubind(topology, cpuset, 0)) {
            char *str;
            int error = errno;
            hwloc_bitmap_asprintf(&str, obj->cpuset);
            printf("Couldn't bind to cpuset %s: %s\n", str, strerror(error));
            free(str);
        }
        /* Free our cpuset copy */
        hwloc_bitmap_free(cpuset);
    }
    /*****************************************************************
     * Sixth example:
     * Allocate some memory on the last NUMA node, bind some existing
     * memory to the last NUMA node.
     *****************************************************************/
    /* Get last node. There's always at least one. */
    n = hwloc_get_nbobjs_by_type(topology, HWLOC_OBJ_NUMANODE);
    obj = hwloc_get_obj_by_type(topology, HWLOC_OBJ_NUMANODE, n - 1);
    size = 1024*1024;
    m = hwloc_alloc_membind(topology, size, obj->nodeset,
                            HWLOC_MEMBIND_BIND, HWLOC_MEMBIND_BYNODESET);
    hwloc_free(topology, m, size);
    m = malloc(size);
    hwloc_set_area_membind(topology, m, size, obj->nodeset,
                           HWLOC_MEMBIND_BIND, HWLOC_MEMBIND_BYNODESET);
    free(m);
    /* Destroy topology object. */
    hwloc_topology_destroy(topology);
    return 0;
}
```

hwloc provides a `pkg-config` executable to obtain relevant compiler and linker flags. See Compiling software on top of hwloc's C AI for details on building program on top of hwloc's API using GNU Make or CMake.

On a machine 2 processor packages – each package of which has two processing cores – the output from running

`hwloc-hello` could be something like the following:

```
shell$ ./hwloc-hello
*** Objects at level 0
Index 0: Machine
*** Objects at level 1
Index 0: Package#0
Index 1: Package#1
*** Objects at level 2
Index 0: Core#0
Index 1: Core#1
Index 2: Core#3
Index 3: Core#2
*** Objects at level 3
Index 0: PU#0
Index 1: PU#1
Index 2: PU#2
Index 3: PU#3
*** Printing overall tree
Machine
  Package#0
    Core#0
      PU#0
    Core#1
      PU#1
  Package#1
    Core#3
      PU#2
    Core#2
      PU#3
*** 2 package(s)
*** Logical processor 0 has 0 caches totaling 0KB
shell$
```

1.5 Questions and Bugs

Bugs should be reported in the tracker (https://github.com/open-mpi/hwloc/issues). Opening a new issue automatically displays lots of hints about how to debug and report issues.
Questions may be sent to the users or developers mailing lists (https://www.open-mpi.org/community/lists/hwloc.php).
There is also a `#hwloc` IRC channel on Libera Chat (irc.libera.chat).

1.6 History / Credits

hwloc is the evolution and merger of the libtopology project and the Portable Linux Processor Affinity (PLPA) (https://www.open-mpi.org/projects/plpa/) project. Because of functional and ideological overlap, these two code bases and ideas were merged and released under the name "hwloc" as an Open MPI sub-project. libtopology was initially developed by the Inria Runtime Team-Project. PLPA was initially developed by the Open MPI development team as a sub-project. Both are now deprecated in favor of hwloc, which is distributed as an Open MPI sub-project.

Chapter 2

Installation

hwloc (https://www.open-mpi.org/projects/hwloc/) is available under the BSD license. It is hosted as a sub-project of the overall Open MPI project (https://www.open-mpi.org/). Note that hwloc does not require any functionality from Open MPI – it is a wholly separate (and much smaller!) project and code base. It just happens to be hosted as part of the overall Open MPI project.

2.1 Basic Installation

Installation is the fairly common GNU-based process:

```
shell$ ./configure --prefix=...
shell$ make
shell$ make install
```

The hwloc command-line tool "lstopo" produces human-readable topology maps, as mentioned above. Running the "lstopo" tool is a good way to check as a graphical output whether hwloc properly detected the architecture of your node.

2.2 Optional Dependencies

lstopo may also export graphics to the SVG and "fig" file formats. Support for PDF, Postscript, and PNG exporting is provided if the "Cairo" development package (usually `cairo-devel` or `libcairo2-dev`) can be found in "lstopo" when hwloc is configured and build.

The hwloc core may also benefit from the following development packages:

- libpciaccess for full I/O device discovery (`libpciaccess-devel` or `libpciaccess-dev` package). On Linux, PCI discovery may still be performed (without vendor/device names) even if libpciaccess cannot be used.
- AMD or NVIDIA OpenCL implementations for OpenCL device discovery.
- the NVIDIA CUDA Toolkit for CUDA device discovery. See How do I enable CUDA and select which CUDA version to use?.
- the NVIDIA Management Library (NVML) for NVML device discovery. It is included in CUDA since version 8.0. Older NVML releases were available within the NVIDIA GPU Deployment Kit from https://developer.nvidia.com/gpu-deployment-kit .
- the NV-CONTROL X extension library (NVCtrl) for NVIDIA display discovery. The relevant development package is usually `libXNVCtrl-devel` or `libxnvctrl-dev`. It is also available within nvidia-settings from ftp://download.nvidia.com/XFree86/nvidia-settings/ and https://github.com/NVIDIA/nvidia-settings/ .
- the AMD ROCm SMI library for RSMI device discovery. The relevant development package is usually `rocm-smi-lib64` or `librocm-smi-dev`. See How do I enable ROCm SMI and select which version to use?.

- the oneAPI Level Zero library. The relevant development package is usually `level-zero-dev` or `level-zero-devel`.
- libxml2 for full XML import/export support (otherwise, the internal minimalistic parser will only be able to import XML files that were exported by the same hwloc release). See Importing and exporting topologies from/to XML files for details. The relevant development package is usually `libxml2-devel` or `libxml2-dev`.
- libudev on Linux for easier discovery of OS device information (otherwise hwloc will try to manually parse udev raw files). The relevant development package is usually `libudev-devel` or `libudev-dev`.
- libtool's ltdl library for dynamic plugin loading if the native dlopen cannot be used. The relevant development package is usually `libtool-ltdl-devel` or `libltdl-dev`.

PCI and XML support may be statically built inside the main hwloc library, or as separate dynamically-loaded plugins (see the Components and plugins section).
Also note that if you install supplemental libraries in non-standard locations, hwloc's configure script may not be able to find them without some help. You may need to specify additional CPPFLAGS, LDFLAGS, or PKG_CONF↩IG_PATH values on the configure command line.
For example, if libpciaccess was installed into /opt/pciaccess, hwloc's configure script may not find it by default. Try adding PKG_CONFIG_PATH to the ./configure command line, like this:

```
./configure PKG_CONFIG_PATH=/opt/pciaccess/lib/pkgconfig ...
```

Note that because of the possibility of GPL taint, the `pciutils` library `libpci` will not be used (remember that hwloc is BSD-licensed).

2.3 Installing from a Git clone

Additionally, the code can be directly cloned from Git:

```
shell$ git clone https://github.com/open-mpi/hwloc.git
shell$ cd hwloc
shell$ ./autogen.sh
```

Note that GNU Autoconf >=2.63, Automake >=1.11 and Libtool >=2.2.6 are required when building from a Git clone.
Nightly development snapshots are available on the web site, they can be configured and built without any need for Git or GNU Autotools.

Chapter 3

Compiling software on top of hwloc's C API

A program using the hwloc C API (for instance with `hwloc-hello.c` presented in API Example) may be built with standard development tools. `pkg-config` provides easy ways to retrieve the required compiler and linker flags as described below, but it is not mandatory.

3.1 Compiling on top of hwloc's C API with GNU Make

Here's an example of Makefile for building `hwloc-hello.c` with GNU Make:

```
CFLAGS += $(shell pkg-config --cflags hwloc)
LDLIBS += $(shell pkg-config --libs hwloc)

hwloc-hello: hwloc-hello.c
        $(CC) hwloc-hello.c $(CFLAGS) -o hwloc-hello $(LDLIBS)
```

3.2 Compiling on top of hwloc's C API with CMake

Here's an example de `CMakeLists.txt` which shows variables obtained from `pkg-config` and how to use them:

```
cmake_minimum_required(VERSION 3.5)
project(TEST_HWLOC C)
include(FindPkgConfig)
if(PKG_CONFIG_EXECUTABLE)
  unset(HWLOC_FOUND CACHE)
  pkg_search_module(HWLOC hwloc)
  if(HWLOC_FOUND)
    message(STATUS "HWLOC_LIBRARIES=${HWLOC_LIBRARIES}")
    message(STATUS "HWLOC_LINK_LIBRARIES=${HWLOC_LINK_LIBRARIES}")
    message(STATUS "HWLOC_LIBRARY_DIRS=${HWLOC_LIBRARY_DIRS}")
    message(STATUS "HWLOC_LDFLAGS=${HWLOC_LDFLAGS}")
    message(STATUS "HWLOC_LDFLAGS_OTHERS=${HWLOC_LDFLAGS_OTHERS}")
    message(STATUS "HWLOC_INCLUDE_DIRS=${HWLOC_INCLUDE_DIRS}")
    message(STATUS "HWLOC_CFLAGS=${HWLOC_CFLAGS}")
    message(STATUS "HWLOC_CFLAGS_OTHER=${HWLOC_CFLAGS_OTHER}")
  else()
    message(FATAL_ERROR "HWLOC not found with pkg-config, add the path to hwloc.pc in PKG_CONFIG_PATH.")
  endif()
else()
  message(FATAL_ERROR "PKG_CONFIG_EXECUTABLE: not found.")
endif()

add_executable(hwloc-hello hwloc-hello.c)
target_include_directories(hwloc-hello PRIVATE ${HWLOC_INCLUDE_DIRS})
target_compile_options(hwloc-hello PRIVATE ${HWLOC_CFLAGS})
target_link_libraries(hwloc-hello PRIVATE ${HWLOC_LINK_LIBRARIES})
target_link_options(hwloc-hello PRIVATE ${HWLOC_LDFLAGS})
```

The project may be built with:

```
cmake -B build
cmake --build build --verbose
```

The built binary is then available under `build/hwloc-hello`.

Chapter 4

Terms and Definitions

4.1 Objects

Object Interesting kind of part of the system, such as a Core, a L2Cache, a NUMA memory node, etc. The different types detected by hwloc are detailed in the hwloc_obj_type_t enumeration.

Objects are topologically sorted by locality (CPU and node sets) into a tree (see Hierarchy, Tree and Levels).

Object Kind There are four kinds of Objects: Memory (NUMA nodes and Memory-side caches), I/O (Bridges, PCI and OS devices), Misc, and Normal (everything else, including Machine, Package, Die, Core, PU, CPU Caches, etc.). Normal and Memory objects have (non-NULL) CPU sets and nodesets, while I/O and Misc don't.

See also

Kinds of object Type.

Processing Unit (PU) The smallest processing element that can be represented by a hwloc object. It may be a single-core processor, a core of a multicore processor, or a single thread in a SMT processor (also sometimes called "Logical processor", not to be confused with "Logical index of a processor"). hwloc's PU acronym stands for Processing Unit.

Package A processor Package is the physical package that usually gets inserted into a socket on the motherboard. It is also often called a physical processor or a CPU even if these names bring confusion with respect to cores and processing units. A processor package usually contains multiple cores (and may also be composed of multiple dies). hwloc Package objects were called Sockets up to hwloc 1.10.

NUMA Node An object that contains memory that is directly and byte-accessible to the host processors. It is usually close to some cores as specified by its CPU set. Hence it is attached as a memory child of the object that groups those cores together, for instance a Package objects with 4 Core children (see Hierarchy, Tree and Levels).

Memory-side Cache A cache in front of a specific memory region (e.g. a range of physical addresses). It caches all accesses to that region without caring about which core issued the request. This is the opposite of usual CPU caches where only accesses from the local cores are cached, without caring about the target memory.

In hwloc, memory-side caches are memory objects placed between their local CPU objects (parent) and the target NUMA node memory (child).

4.2 Indexes and Sets

OS or physical index The index that the operating system (OS) uses to identify the object. This may be completely arbitrary, non-unique, non-contiguous, not representative of logical proximity, and may depend on the BIOS configuration. That is why hwloc almost never uses them, only in the default lstopo output (`P#x`) and cpuset masks. See also Should I use logical or physical/OS indexes? and how?.

Logical index Index to uniquely identify objects of the same type and depth, automatically computed by hwloc according to the topology. It expresses logical proximity in a generic way, i.e. objects which have adjacent

logical indexes are adjacent in the topology. That is why hwloc almost always uses it in its API, since it expresses logical proximity. They can be shown (as `L#x`) by `lstopo` thanks to the `-l` option. This index is always linear and in the range [0, num_objs_same_type_same_level-1]. Think of it as ``cousin rank." The ordering is based on topology first, and then on OS CPU numbers, so it is stable across everything except firmware CPU renumbering. "Logical index" should not be confused with "Logical processor". A "Logical processor" (which in hwloc we rather call "processing unit" to avoid the confusion) has both a physical index (as chosen arbitrarily by BIOS/OS) and a logical index (as computed according to logical proximity by hwloc). See also Should I use logical or physical/OS indexes? and how?.

CPU set The set of processing units (PU) logically included in an object (if it makes sense). They are always expressed using physical processor numbers (as announced by the OS). They are implemented as the hwloc_bitmap_t opaque structure. hwloc CPU sets are just masks, they do *not* have any relation with an operating system actual binding notion like Linux' cpusets. I/O and Misc objects do not have CPU sets while all Normal and Memory objects have non-NULL CPU sets.

Node set The set of NUMA memory nodes logically included in an object (if it makes sense). They are always expressed using physical node numbers (as announced by the OS). They are implemented with the hwloc_bitmap_t opaque structure. as bitmaps. I/O and Misc objects do not have Node sets while all Normal and Memory objects have non-NULL nodesets.

Bitmap A possibly-infinite set of bits used for describing sets of objects such as CPUs (CPU sets) or memory nodes (Node sets). They are implemented with the hwloc_bitmap_t opaque structure.

4.3 Hierarchy, Tree and Levels

Parent object The object logically containing the current object, for example because its CPU set includes the CPU set of the current object. All objects have a non-NULL parent, except the root of the topology (Machine object).

Ancestor object The parent object, or its own parent, and so on.

Children object(s) The object (or objects) contained in the current object because their CPU set is included in the CPU set of the current object. Each object may also contain separated lists for Memory, I/O and Misc object children.

Arity The number of normal children of an object. There are also specific arities for Memory, I/O and Misc children.

Sibling objects Objects in the same children list, which all of them are normal children of the same parent, or all of them are Memory children of the same parent, or I/O children, or Misc. They usually have the same type (and hence are cousins, as well). But they may not if the topology is asymmetric.

Sibling rank Index to uniquely identify objects which have the same parent, and is always in the range [0, arity-1] (respectively memory_arity, io_arity or misc_arity for Memory, I/O and Misc children of a parent).

Cousin objects Objects of the same type (and depth) as the current object, even if they do not have the same parent.

Level Set of objects of the same type and depth. All these objects are cousins.

Memory, I/O and Misc objects also have their own specific levels and (virtual) depth.

Depth Nesting level in the object tree, starting from the root object. If the topology is symmetric, the depth of a child is equal to the parent depth plus one, and an object depth is also equal to the number of parent/child links between the root object and the given object. If the topology is asymmetric, the difference between some parent and child depths may be larger than one when some intermediate levels (for instance groups) are missing in only some parts of the machine.

The depth of the Machine object is always 0 since it is always the root of the topology. The depth of PU objects is equal to the number of levels in the topology minus one.

Memory, I/O and Misc objects also have their own specific levels and depth.

The following diagram can help to understand the vocabulary of the relationships by showing the example of a machine with two dual core packages (with no hardware threads); thus, a topology with 5 levels. Each box with rounded corner corresponds to one hwloc_obj_t, containing the values of the different integer fields (depth, logical↩ _index, etc.), and arrows show to which other hwloc_obj_t pointers point to (first_child, parent, etc.).
The topology always starts with a Machine object as root (depth 0) and ends with PU objects at the bottom (depth 4 here).
Objects of the same level (cousins) are listed in red boxes and linked with red arrows. Children of the same parent (siblings) are linked with blue arrows.
The L2 cache of the last core is intentionally missing to show how asymmetric topologies are handled. See What happens if my topology is asymmetric? for more information about such strange topologies.

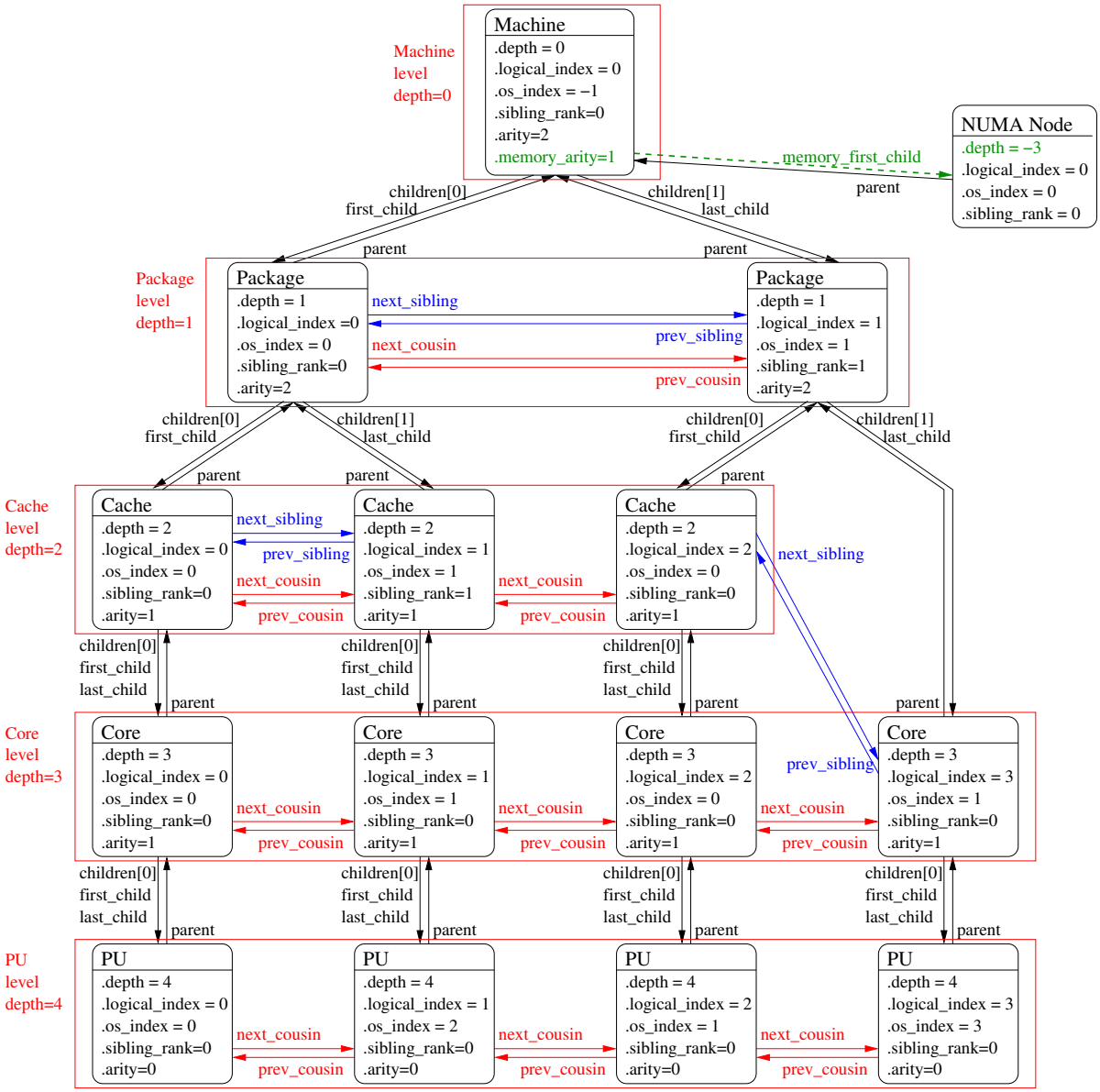

It should be noted that for PU objects, the logical index – as computed linearly by hwloc – is not the same as the OS index.
The NUMA node is on the side because it is not part of the main tree but rather attached to the object that corresponds to its locality (the entire machine here, hence the root object). It is attached as a *Memory* child (in green) and has a virtual depth (negative). It could also have siblings if there were multiple local NUMA nodes, or cousins if other NUMA nodes were attached somewhere else in the machine.
I/O or Misc objects could be attached in a similar manner.

Chapter 5

Command-Line Tools

hwloc comes with an extensive C programming interface and several command line utilities. Each of them is fully documented in its own manual page; the following is a summary of the available command line tools.

5.1 lstopo and lstopo-no-graphics

lstopo (also known as hwloc-ls) displays the hierarchical topology map of the current system. The output may be graphical, ascii-art or textual, and can also be exported to numerous file formats such as PDF, PNG, XML, and others. Advanced graphical outputs require the "Cairo" development package (usually `cairo-devel` or `libcairo2-dev`).
lstopo and lstopo-no-graphics accept the same command-line options. However, graphical outputs are only available in lstopo. Textual outputs (those that do not depend on heavy external libraries such as Cairo) are supported in both lstopo and lstopo-no-graphics.
This command can also display the processes currently bound to a part of the machine (via the `--ps` option).
Note that lstopo can read XML files and/or alternate chroot filesystems and display topological maps representing those systems (e.g., use lstopo to output an XML file on one system, and then use lstopo to read in that XML file and display it on a different system).

5.2 hwloc-bind

hwloc-bind binds processes to specific hardware objects through a flexible syntax. A simple example is binding an executable to specific cores (or packages or bitmaps or ...). The hwloc-bind(1) man page provides much more detail on what is possible.
hwloc-bind can also be used to retrieve the current process' binding, or retrieve the last CPU(s) where a process ran, or operate on memory binding.
Just like hwloc-calc, the input locations given to hwloc-bind may be either objects or cpusets (bitmaps as reported by hwloc-calc or hwloc-distrib).

5.3 hwloc-calc

hwloc-calc is hwloc's Swiss Army Knife command-line tool for converting things. The input may be either objects or cpusets (bitmaps as reported by another hwloc-calc instance or by hwloc-distrib), that may be combined by addition, intersection or subtraction. The output may be expressed as:

- a cpuset bitmap: This compact opaque representation of objects is useful for shell scripts etc. It may passed to hwloc command-line tools such as hwloc-calc or hwloc-bind, or to hwloc command-line options such as `lstopo --restrict`.
- a nodeset bitmap: Another opaque representation that represents memory locality more precisely, especially if some NUMA nodes are CPU less or if multiple NUMA nodes are local to the same CPUs.
- the amount of the equivalent hwloc objects from a specific type, or the list of their indexes. This is useful for iterating over all similar objects (for instance all cores) within a given part of a platform.

- a hierarchical description of objects, for instance a thread index within a core within a package. This gives a better view of the actual location of an object.

Moreover, input and/or output may be use either physical/OS object indexes or as hwloc's logical object indexes. It eases cooperation with external tools such as taskset or numactl by exporting hwloc specifications into list of processor or NUMA node physical indexes. See also Should I use logical or physical/OS indexes? and how?.

5.4 hwloc-info

hwloc-info dumps information about the given objects, as well as all its specific attributes. It is intended to be used with tools such as grep for filtering certain attribute lines. When no object is specified, or when `--topology` is passed, hwloc-info prints a summary of the topology. When `--support` is passed, hwloc-info lists the supported features for the topology.

5.5 hwloc-distrib

hwloc-distrib generates a set of cpuset bitmaps that are uniformly distributed across the machine for the given number of processes. These strings may be used with hwloc-bind to run processes to maximize their memory bandwidth by properly distributing them across the machine.

5.6 hwloc-ps

hwloc-ps is a tool to display the bindings of processes that are currently running on the local machine. By default, hwloc-ps only lists processes that are bound; unbound process (and Linux kernel threads) are not displayed.

5.7 hwloc-annotate

hwloc-annotate may modify object (and topology) attributes such as string information (see Custom string infos for details) or Misc children objects. It may also add distances, memory attributes, etc. to the topology. It reads an input topology from a XML file and outputs the annotated topology as another XML file.

5.8 hwloc-diff, hwloc-patch and hwloc-compress-dir

hwloc-diff computes the difference between two topologies and outputs it to another XML file.
hwloc-patch reads such a difference file and applies to another topology.
hwloc-compress-dir compresses an entire directory of XML files by using hwloc-diff to save the differences between topologies instead of entire topologies.

5.9 hwloc-dump-hwdata

hwloc-dump-hwdata is a Linux and x86-specific tool that dumps (during boot, privileged) some topology and locality information from raw hardware files (SMBIOS and ACPI tables) to human-readable and world-accessible files that the hwloc library will later reuse.
Currently only used on Intel Xeon Phi processor platforms. See Why do I need hwloc-dump-hwdata for memory on Intel Xeon Phi proc
See `HWLOC_DUMPED_HWDATA_DIR` in Environment Variables for details about the location of dumped files.

5.10 hwloc-gather-topology and hwloc-gather-cpuid

hwloc-gather-topology is a Linux-specific tool that saves the relevant topology files of the current machine into a tarball (and the corresponding lstopo outputs).
hwloc-gather-cpuid is a x86-specific tool that dumps the result of CPUID instructions on the current machine into a directory.
The output of hwloc-gather-cpuid is included in the tarball saved by hwloc-gather-topology when running on Linux/x86.

These files may be used later (possibly offline) for simulating or debugging a machine without actually running on it.

Chapter 6

Environment Variables

The behavior of the hwloc library and tools may be tuned thanks to the following environment variables.

HWLOC_XMLFILE=/path/to/file.xml enforces the discovery from the given XML file as if hwloc_topology_set_xml() had been called. This file may have been generated earlier with lstopo file.xml. For convenience, this backend provides empty binding hooks which just return success. To have hwloc still actually call OS-specific hooks, HWLOC_THISSYSTEM should be set 1 in the environment too, to assert that the loaded file is really the underlying system. See also Importing and exporting topologies from/to XML files.

HWLOC_SYNTHETIC=synthetic_description enforces the discovery through a synthetic description string as if hwloc_topology_set_synthetic() had been called. For convenience, this backend provides empty binding hooks which just return success. See also Synthetic topologies.

HWLOC_XML_VERBOSE=1

HWLOC_SYNTHETIC_VERBOSE=1 enables verbose messages in the XML or synthetic topology backends. hwloc XML backends (see Importing and exporting topologies from/to XML files) can emit some error messages to the error output stream. Enabling these verbose messages within hwloc can be useful for understanding failures to parse input XML topologies. Similarly, enabling verbose messages in the synthetic topology backend can help understand why the description string is invalid. See also Synthetic topologies.

HWLOC_THISSYSTEM=1 enforces the return value of hwloc_topology_is_thissystem(), as if HWLOC_TOPOLOGY_FLAG_IS_THIS was set with hwloc_topology_set_flags(). It means that it makes hwloc assume that the selected backend provides the topology for the system on which we are running, even if it is not the OS-specific backend but the XML backend for instance. This means making the binding functions actually call the OS-specific system calls and really do binding, while the XML backend would otherwise provide empty hooks just returning success. This can be used for efficiency reasons to first detect the topology once, save it to a XML file, and quickly reload it later through the XML backend, but still having binding functions actually do bind. This also enables support for the variable HWLOC_THISSYSTEM_ALLOWED_RESOURCES.

HWLOC_THISSYSTEM_ALLOWED_RESOURCES=1 Get the set of allowed resources from the native operating system even if the topology was loaded from XML or synthetic description, as if HWLOC_TOPOLOGY_FLAG_THISSYSTEM_ALLOWED_RESOURCES was set with hwloc_topology_set_flags(). This variable requires the topology to match the current system (see the variable HWLOC_THISSYSTEM). This is useful when the topology is not loaded directly from the local machine (e.g. for performance reason) and it comes with all resources, but the running process is restricted to only a part of the machine (for instance because of Linux Cgroup/Cpuset).

HWLOC_ALLOW=all Totally ignore administrative restrictions such as Linux Cgroups and consider all resources (PUs and NUMA nodes) as allowed. This is different from setting HWLOC_TOPOLOGY_FLAG_INCLUDE↩ _DISALLOWED which gathers all resources but marks the unavailable ones as disallowed.

HWLOC_HIDE_ERRORS=1 enables or disables verbose reporting of errors. The hwloc library may issue warnings to the standard error stream when it detects a problem during topology discovery, for instance if the operating system (or user) gives contradictory topology information.

By default (1), hwloc only shows critical errors such as invalid hardware topology information or invalid configuration. If set to 0 (default in lstopo), more errors are displayed, for instance a failure to initialize CUDA or NVML. If set to 2, no hwloc error messages are shown.

Note that additional verbose messages may be enabled with other variables such as HWLOC_GROUPIN↩G_VERBOSE.

HWLOC_USE_NUMA_DISTANCES=7 enables or disables the use of NUMA distances. NUMA distances and memory target/initiator information may be used to improve the locality of NUMA nodes, especially CPU-less nodes. Bits in the value of this environment variable enable different features: Bit 0 enables the gathering of NUMA distances from the operating system. Bit 1 further enables the use of NUMA distances to improve the locality of CPU-less nodes. Bit 2 enables the use of target/initiator information.

HWLOC_MEMTIERS_GUESS=none

HWLOC_MEMTIERS_GUESS=all Disable or enable all heuristics to guess memory subtypes and tiers. By default, hwloc only uses heuristics that are likely correct and disables those that are unlikely.

HWLOC_MEMTIERS=0x0f=HBM;0xf=DRAM Enforce the memory tiers from the given semi-colon separated list. Each entry specifies a bitmask (nodeset) of NUMA nodes and their subtype. Nodes not listed in any entry are not placed in any tier.

If an empty value or `none` is given, tiers are entirely disabled.

HWLOC_MEMTIERS_REFRESH=1 Force the rebuilding of memory tiers. This is mostly useful when importing a XML topology from an old hwloc version which was not able to guess memory subtypes and tiers.

HWLOC_GROUPING=1 enables or disables objects grouping based on distances. By default, hwloc uses distance matrices between objects (either read from the OS or given by the user) to find groups of close objects. These groups are described by adding intermediate Group objects in the topology. Setting this environment variable to 0 will disable this grouping. This variable supersedes the obsolete HWLOC_IGNORE_DISTAN↩CES variable.

HWLOC_GROUPING_ACCURACY=0.05 relaxes distance comparison during grouping. By default, objects may be grouped if their distances form a minimal distance graph. When setting this variable to 0.02, and when HWLOC_DISTANCES_ADD_FLAG_GROUP_INACCURATE is given, these distances do not have to be strictly equal anymore, they may just be equal with a 2% error. If set to `try` instead of a numerical value, hwloc will try to group with perfect accuracy (0, the default), then with 0.01, 0.02, 0.05 and finally 0.1. Numbers given in this environment variable should always use a dot as a decimal mark (for instance 0.01 instead of 0,01).

HWLOC_GROUPING_VERBOSE=0 enables or disables some verbose messages during grouping. If this variable is set to 1, some debug messages will be displayed during distance-based grouping of objects even if debug was not specific at configure time. This is useful when trying to find an interesting distance grouping accuracy.

HWLOC_CPUKINDS_RANKING=default change the ranking policy for CPU kinds. hwloc tries to rank CPU kinds that are energy efficiency first, and then CPUs that are rather high-performance and power hungry.
By default, if available, the OS-provided efficiency is used for ranking. Otherwise, the frequency and/or core types are used when available.
This environment variable may be set to `coretype+frequency`, `coretype+frequency_strict`, `coretype`, `frequency`, `frequency_base`, `frequency_max`, `forced_efficiency`, `no_↩forced_efficiency`, `default`, or `none`.

HWLOC_CPUKINDS_MAXFREQ=adjust=10 change the use of the max frequency in the Linux backend. hwloc tries to read the base and max frequencies of each core on Linux. Some hardware features such as Intel Turbo Boost Max 3.0 make some cores report slightly higher max frequencies than others in the same C↩PU package. Despite having slightly different frequencies, these cores are considered identical instead of exposing an hybrid CPU. Hence, by default, hwloc uniformizes the max frequencies of cores that have the same base frequency (higher values are downgraded by up to 10%).

If this environment variable is set to `adjust=X`, the 10% threshold is replaced with X. If set to 1, max frequencies are not adjusted anymore, some homogeneous processors may appear hybrid because of this. If set to 0, max frequencies are entirely ignored.

HWLOC_CPUKINDS_HOMOGENEOUS=0 uniformize max frequency, base frequency and Linux capacity to force a single homogeneous kind of CPUs. This is enabled by default on NVIDIA Grace but may be disabled if set to 0 (or enabled on other platforms if set to 1).

HWLOC_PCI_LOCALITY=<domain/bus> <cpuset>;...

HWLOC_PCI_LOCALITY=/path/to/pci/locality/file changes the locality of I/O devices behing the specified PCI buses. If no I/O locality information is available or if the BIOS reports incorrect information, it is possible to move a I/O device tree (OS and/or PCI devices with optional bridges) near a custom set of processors.
Localities are given either inside the environment variable itself, or in the pointed file. They may be separated either by semi-colons or by line-breaks. Invalid localities are silently ignored, hence it is possible to insert comments between actual localities.
Each locality contains a domain/bus specification (in hexadecimal numbers as usual) followed by a whitespace and a cpuset:

- `0001 <cpuset>` specifies the locality of all buses in PCI domain 0000.
- `0000:0f <cpuset>` specifies only PCI bus 0f in domain 0000.
- `0002:04-0a <cpuset>` specifies a range of buses (from 04 to 0a) within domain 0002.

Domain/bus specifications should usually match entire hierarchies of buses behind a bridge (including primary, secondary and subordinate buses). For instance, if hostbridge 0000:00 is above other bridges/switches with buses 0000:01 to 0000:09, the variable should be HWLOC_PCI_LOCALITY="0000:00-09 <cpuset>".
It supersedes the old HWLOC_PCI_0000_00_LOCALCPUS=<cpuset> which only works when hostbridges exist in the topology.
If the variable is defined to empty or invalid, no forced PCI locality is applied but hwloc's internal automatic locality quirks are disabled, which means the exact PCI locality reported by the platform is used.

HWLOC_X86_TOPOEXT_NUMANODES=0 use AMD topoext CPUID leaf in the x86 backend to detect NUMA nodes. When using the x86 backend, setting this variable to 1 enables the building of NUMA nodes from AMD processor CPUID instructions. However this strategy does not always reflect BIOS configuration such as NUMA interleaving. And node indexes may be different from those of the operating system. Hence this should only be used when OS backends are wrong and the user is sure that CPUID returns correct NUMA information.

HWLOC_KEEP_NVIDIA_GPU_NUMA_NODES=0 show or hide NUMA nodes that correspond to NVIDIA GPU memory. By default they are ignored on POWER platforms to avoid interleaved memory being allocated on GPU by mistake.

Setting this environment variable to 0 hides the NUMA nodes (default on POWER). Setting to 1 exposes these NUMA nodes (default on non-POWER platforms such as NVIDIA Grace Hopper).

These NUMA nodes may be recognized by the *GPUMemory* subtype. They also have a *PCIBusID* info attribute to identify the corresponding GPU.

HWLOC_KNL_MSCACHE_L3=0 Expose the KNL MCDRAM in cache mode as a Memory-side Cache instead of a L3. hwloc releases prior to 2.1 exposed the MCDRAM cache as a CPU-side L3 cache. Now that Memory-side caches are supported by hwloc, it is still exposed as a L3 by default to avoid breaking existing applications. Setting this environment variable to 1 will expose it as a proper Memory-side cache.

HWLOC_WINDOWS_PROCESSOR_GROUP_OBJS=0 Expose Windows processor groups as hwloc Group objects. By default, these groups are disabled because they may be incompatible with the hierarchy of resources that hwloc builds (leading to warnings). Setting this variable to 1 reenables the addition of these groups to the topology.

This variable does not impact the querying of Windows processor groups using the dedicated API in hwloc/windows.h, this feature is always supported.

HWLOC_ANNOTATE_GLOBAL_COMPONENTS=0 Allow components to annotate the topology even if they are usually excluded by global components by default. Setting this variable to 1 and also setting `HWLOC_COMPONENTS=xml,pci,stop` enables the addition of PCI vendor and model info attributes to a XML topology that was generated without those names (if pciaccess was missing).

HWLOC_FSROOT=/path/to/linux/filesystem-root/ switches to reading the topology from the specified Linux filesystem root instead of the main file-system root. This directory may have been saved previously from another machine with `hwloc-gather-topology`.
One should likely also set `HWLOC_COMPONENTS=linux,stop` so that non-Linux backends are disabled (the `-i` option of command-line tools takes care of both).

Not using the main file-system root causes hwloc_topology_is_thissystem() to return 0. For convenience, this backend provides empty binding hooks which just return success. To have hwloc still actually call OS-specific hooks, HWLOC_THISSYSTEM should be set 1 in the environment too, to assert that the loaded file is really the underlying system.

HWLOC_CPUID_PATH=/path/to/cpuid/ forces the x86 backend to read dumped CPUIDs from the given directory instead of executing actual x86 CPUID instructions. This directory may have been saved previously from another machine with `hwloc-gather-cpuid`.
One should likely also set `HWLOC_COMPONENTS=x86,stop` so that non-x86 backends are disabled (the `-i` option of command-line tools takes care of both).
It causes hwloc_topology_is_thissystem() to return 0. For convenience, this backend provides empty binding hooks which just return success. To have hwloc still actually call OS-specific hooks, HWLOC_THISSYSTEM should be set 1 in the environment too, to assert that the loaded CPUID dump is really the underlying system.

HWLOC_DUMPED_HWDATA_DIR=/path/to/dumped/files/ loads files dumped by `hwloc-dump-hwdata` (on Linux) from the given directory. The default dump/load directory is configured during build based on --runstatedir, --localstatedir, and --prefix options. It usually points to `/var/run/hwloc/` in Linux distribution packages, but it may also point to `$prefix/var/run/hwloc/` when manually installing and only specifying --prefix.

HWLOC_COMPONENTS=list,of,components forces a list of components to enable or disable. Enable or disable the given comma-separated list of components (if they do not conflict with each other). Component names prefixed with - are disabled (a single phase may also be disabled).

Once the end of the list is reached, hwloc falls back to enabling the remaining components (sorted by priority) that do not conflict with the already enabled ones, and unless explicitly disabled in the list. If `stop` is met, the enabling loop immediately stops, no more component is enabled.

If `xml` or `synthetic` components are selected, the corresponding XML filename or synthetic description string should be pass in `HWLOC_XMLFILE` or `HWLOC_SYNTHETIC` respectively.

Since this variable is the low-level and more generic way to select components, it takes precedence over environment variables for selecting components.

If the variable is set to an empty string (or set to a single comma), no specific component is loaded first, all components are loaded in priority order.

See Selecting which components to use for details.

HWLOC_COMPONENTS_VERBOSE=1 displays verbose information about components. Display messages when components are registered or enabled. This is the recommended way to list the available components with their priority (all of them are *registered* at startup).

HWLOC_PLUGINS_PATH=/path/to/hwloc/plugins/:... changes the default search directory for plugins. By default, `$libdir/hwloc` is used. The variable may contain several colon-separated directories.

HWLOC_PLUGINS_VERBOSE=1 displays verbose information about plugins. List which directories are scanned, which files are loaded, and which components are successfully loaded.

HWLOC_PLUGINS_BLACKLIST=filename1,filename2,... prevents plugins from being loaded if their filename (without path) is listed. Plugin filenames may be found in verbose messages outputted when HWLOC_PL↩UGINS_VERBOSE=1.

HWLOC_DEBUG_VERBOSE=0 disables all verbose messages that are enabled by default when `-enable-debug` is passed to configure. When set to more than 1, even more verbose messages are displayed. The default is 1.

Chapter 7

CPU and Memory Binding Overview

Binding tasks and data buffers is hwloc's second main goal after discovering and exposing the hardware topology. hwloc defines APIs to bind threads and processes to cores and processing units (see CPU binding), and to bind memory buffers to NUMA nodes (see Memory binding). Some examples are available under doc/examples/ in the source tree.
Sections below provide high-level insights on how these APIs work.

7.1 Binding Policies and Portability

hwloc binding APIs are portable to multiple operating systems. However operating systems sometimes define slightly different policies, which means hwloc's behavior might slightly differ.
On the CPU binding side, OSes have different constraints of which sets of PUs can be used for binding (only full cores, random sets of PUs, etc.). Moreover the HWLOC_CPUBIND_STRICT may be given to clarify what to do in some corner cases. It is recommended to read CPU binding for details.
On the memory binding side, things are more complicated. First, there are multiple API for binding existing memory buffers, allocating new ones, etc. Second, multiple policies exist (first-touch, bind, interleave, etc.) but some of them are not implemented by all operating systems. Third, some of these policies have slightly different meanings. For instance, hwloc's **bind** (HWLOC_MEMBIND_BIND) uses Linux' **MPOL_PREFERRED_MANY** (or **MPOL_PREF↩ ERRED**) by default, but it switches to **MPOL_BIND** when strict binding is requested (HWLOC_MEMBIND_STRICT). Reading Memory binding is strongly recommended.

7.2 Joint CPU and Memory Binding (or not)

Some operating systems do not systematically provide separate functions for CPU and memory binding. This means that CPU binding functions may have have effects on the memory binding policy. Likewise, changing the memory binding policy may change the CPU binding of the current thread. This is often not a problem for applications, so by default hwloc will make use of these functions when they provide better binding support.
If the application does not want the CPU binding to change when changing the memory policy, it needs to use the HWLOC_MEMBIND_NOCPUBIND flag to prevent hwloc from using OS functions which would change the CPU binding. Additionally, HWLOC_CPUBIND_NOMEMBIND can be passed to CPU binding function to prevent hwloc from using OS functions would change the memory binding policy. Of course, using these flags will reduce hwloc's overall support for binding, so their use is discouraged.
One can avoid using these flags but still closely control both memory and CPU binding by allocating memory, touching each page in the allocated memory, and then changing the CPU binding. The already-really-allocated memory will then be "locked" to physical memory and will not be migrated. Thus, even if the memory binding policy gets changed by the CPU binding order, the already-allocated memory will not change with it. When binding and allocating further memory, the CPU binding should be performed again in case the memory binding altered the previously-selected CPU binding.

7.3 Current Memory Binding Policy

Not all operating systems support the notion of a "current" memory binding policy for the current process, but such operating systems often still provide a way to allocate data on a given node set. Conversely, some operating systems support the notion of a "current" memory binding policy and do not permit allocating data on a specific node set without changing the current policy and allocate the data. To provide the most powerful coverage of these facilities, hwloc provides:

- functions that set/get the current memory binding policies (if supported): hwloc_set_membind(), hwloc_get_membind(), hwloc_set_proc_membind() and hwloc_get_proc_membind()
- a function that allocates memory bound to specific node set without changing the current memory binding policy (if supported): hwloc_alloc_membind().
- a helper which, if needed, changes the current memory binding policy of the process in order to obtain memory binding: hwloc_alloc_membind_policy().

An application can thus use the two first sets of functions if it wants to manage separately the global process binding policy and directed allocation, or use the third set of functions if it does not care about the process memory binding policy. Again, reading Memory binding is strongly recommended.

Chapter 8

I/O Devices

hwloc usually manipulates processing units and memory but it can also discover I/O devices and report their locality as well. This is useful for placing I/O intensive applications on cores near the I/O devices they use, or for gathering information about all platform components.

8.1 Enabling and requirements

I/O discovery is disabled by default (except in lstopo) for performance reasons. It can be enabled by changing the filtering of I/O object types to `HWLOC_TYPE_FILTER_KEEP_IMPORTANT` or `HWLOC_TYPE_FILTER_KEEP_ALL` before loading the topology, for instance with `hwloc_topology_set_io_types_filter()`.
Note that I/O discovery requires significant help from the operating system. The pciaccess library (the development package is usually `libpciaccess-devel` or `libpciaccess-dev`) is needed to fully detect PCI devices and bridges/switches. On Linux, PCI discovery may still be performed even if `libpciaccess` cannot be used. But it misses PCI device names. Moreover, some operating systems require privileges for probing PCI devices, see Does hwloc require privileged access? for details.
The actual locality of I/O devices is only currently detected on Linux. Other operating system will just report I/O devices as being attached to the topology root object.

8.2 I/O objects

When I/O discovery is enabled and supported, some additional objects are added to the topology. The corresponding I/O object types are:

- `HWLOC_OBJ_OS_DEVICE` describes an operating-system-specific handle such as the *sda* drive or the *eth0* network interface. See OS devices.
- `HWLOC_OBJ_PCI_DEVICE` and `HWLOC_OBJ_BRIDGE` build up a PCI hierarchy made of bridges (that may be actually be switches) and devices. See PCI devices and bridges.

Any of these types may be filtered individually with `hwloc_topology_set_type_filter()`.
hwloc tries to attach these new objects to normal objects (usually NUMA nodes) to match their actual physical location. For instance, if a I/O hub (or root complex) is physically connected to a package, the corresponding hwloc bridge object (and its PCI bridges and devices children) is inserted as a child of the corresponding hwloc Package object. **These children are not in the normal children list but rather in the I/O-specific children list.**
I/O objects also have neither CPU sets nor node sets (NULL pointers) because they are not directly usable by the user applications for binding. Moreover I/O hierarchies may be highly complex (asymmetric trees of bridges). So I/O objects are placed in specific levels with custom depths. Their lists may still be traversed with regular helpers such as hwloc_get_next_obj_by_type(). However, hwloc offers some dedicated helpers such as hwloc_get_next_pcidev() and hwloc_get_next_osdev() for convenience (see Finding I/O objects).

8.3 OS devices

Although each PCI device is uniquely identified by its bus ID (e.g. 0000:01:02.3), a user-space application can hardly find out which PCI device it is actually using. Applications rather use software handles (such as the *eth0*

network interface, the *sda* hard drive, or the *mlx4_0* OpenFabrics HCA). Therefore hwloc tries to add software devices (`HWLOC_OBJ_OS_DEVICE`, also known as OS devices).
OS devices may be attached below PCI devices, but they may also be attached directly to normal objects. Indeed some OS devices are not related to PCI. For instance, NVDIMM block devices (such as *pmem0s* on Linux) are directly attached near their NUMA node (I/O child of the parent whose memory child is the NUMA node). Also, if hwloc could not discover PCI for some reason, PCI-related OS devices may also be attached directly to normal objects.
Finally, OS *subdevices* may be exposed as OS devices children of another OS device. This is the case of LevelZero subdevices for instance.
hwloc first tries to discover OS devices from the operating system, e.g. *eth0*, *sda* or *mlx4_0*. However, this ability is currently only available on Linux for some classes of devices.
hwloc then tries to discover software devices through additional I/O components using external libraries. For instance proprietary graphics drivers do not expose any named OS device, but hwloc may still create one OS object per software handle when supported. For instance the `opencl` and `cuda` components may add some *opencl0d0* and *cuda0* OS device objects.
Here is a list of OS device objects commonly created by hwloc components when I/O discovery is enabled and supported.

- Hard disks, NVMe drives, etc. (HWLOC_OBJ_OSDEV_STORAGE)
  - *sda* or *nvme0n1* (Linux component)
- Non-volatile, high-bandwidth, or special-purpose or CXL memory devices (HWLOC_OBJ_OSDEV_MEMORY, with also HWLOC_OBJ_OSDEV_STORAGE if non-volatile)
  - *dax2.0* or *mem0* (Linux component)
- Network interfaces (HWLOC_OBJ_OSDEV_NETWORK)
  - *eth0*, *wlan0*, *ib0* (Linux component)
  - *hsn0* with "Slingshot" subtype for HPE Cray HSNs (Linux component).
  - *bxi0* with "BXI" subtype for Atos/Bull BXI HCAs (Linux component).
  - OpenFabrics devices as explained below.
- OpenFabrics (InfiniBand, Omni-Path, usNIC, etc) HCAs (HWLOC_OBJ_OSDEV_OPENFABRICS and HWLOC_OBJ_OSDEV_NETWORK)
  - *mlx5_0*, *hfi1_0*, *qib0*, *usnic_0* (Linux component)
- GPUs (HWLOC_OBJ_OSDEV_GPU and possibly HWLOC_OBJ_OSDEV_COPROC)
  - *:0.0* for the first display ("Display" subtype, from the GL component, using the NV-CONTROL X extension library, NVCtrl)
  - *card0* and *renderD128* for DRM device files (from the Linux component, filtered-out by default because considered non-important)
  - Any GPU that may be used as a co-processor as explained below.
- Co-Processors (HWLOC_OBJ_OSDEV_COPROC and possibly HWLOC_OBJ_OSDEV_GPU)
  - *opencl0d0* for the first device of the first OpenCL platform, *opencl1d3* for the fourth device of the second OpenCL platform ("OpenCL" subtype, from the OpenCL component)
  - *ze0* for the first Level Zero device ("LevelZero" subtype, from the levelzero component, using the oneAPI Level Zero library), and *ze0.1* for its second subdevice (if any).
  - *rsmi0* for the first RSMI device ("RSMI" subtype, from the RSMI component, using the AMD ROCm SMI library)
  - *cuda0* for the first NVIDIA CUDA device ("CUDA" subtype, from the CUDA component, using the NVIDIA CUDA Library)
  - *nvml0* for the first NVML device ("NVML" subtype, from the NVML component, using the NVIDIA Management Library)

  - *ve0* for the first NEC Vector Engine device ("VectorEngine" subtype, from the Linux component)

- DMA engine channel (HWLOC_OBJ_OSDEV_DMA)

  - *dma0chan0* (Linux component) when all OS devices are enabled (HWLOC_TYPE_FILTER_KEEP_ALL)

Note that some PCI devices may contain multiple software devices (see the example below).
See also Interoperability With Other Software for managing these devices without considering them as hwloc objects.

8.4 PCI devices and bridges

A PCI hierarchy is usually organized as follows: A hostbridge object (`HWLOC_OBJ_BRIDGE` object with upstream type *Host* and downstream type *PCI*) is attached below a normal object (usually the entire machine or a NUMA node). There may be multiple hostbridges in the machine, attached to different places, but all PCI devices are below one of them (unless the Bridge object type is filtered-out).
Each hostbridge contains one or several children, either other bridges (usually PCI to PCI switches) or PCI devices (`HWLOC_OBJ_PCI_DEVICE`). The number of bridges between the hostbridge and a PCI device depends on the machine.

8.5 Consulting I/O devices and binding

I/O devices may be consulted by traversing the topology manually (with usual routines such as hwloc_get_obj_by_type()) or by using dedicated helpers (such as hwloc_get_pcidev_by_busid(), see Finding I/O objects).
I/O objects do not actually contain any locality information because their CPU sets and node sets are NULL. Their locality must be retrieved by walking up the object tree (through the `parent` link) until a non-I/O object is found (see hwloc_get_non_io_ancestor_obj()). This normal object should have non-NULL CPU sets and node sets which describe the processing units and memory that are immediately close to the I/O device. For instance the path from a OS device to its locality may go across a PCI device parent, one or several bridges, up to a Package node with the same locality.
Command-line tools are also aware of I/O devices. lstopo displays the interesting ones by default (passing `--no-io` disables it).
hwloc-calc and hwloc-bind may manipulate I/O devices specified by PCI bus ID or by OS device name.

- `pci=0000:02:03.0` is replaced by the set of CPUs that are close to the PCI device whose bus ID is given.

- `os=eth0` is replaced by CPUs that are close to the I/O device whose software handle is called `eth0`.

This enables easy binding of I/O-intensive applications near the device they use.

8.6 Examples

The following picture shows a dual-package dual-core host whose PCI bus is connected to the first package and NUMA node.

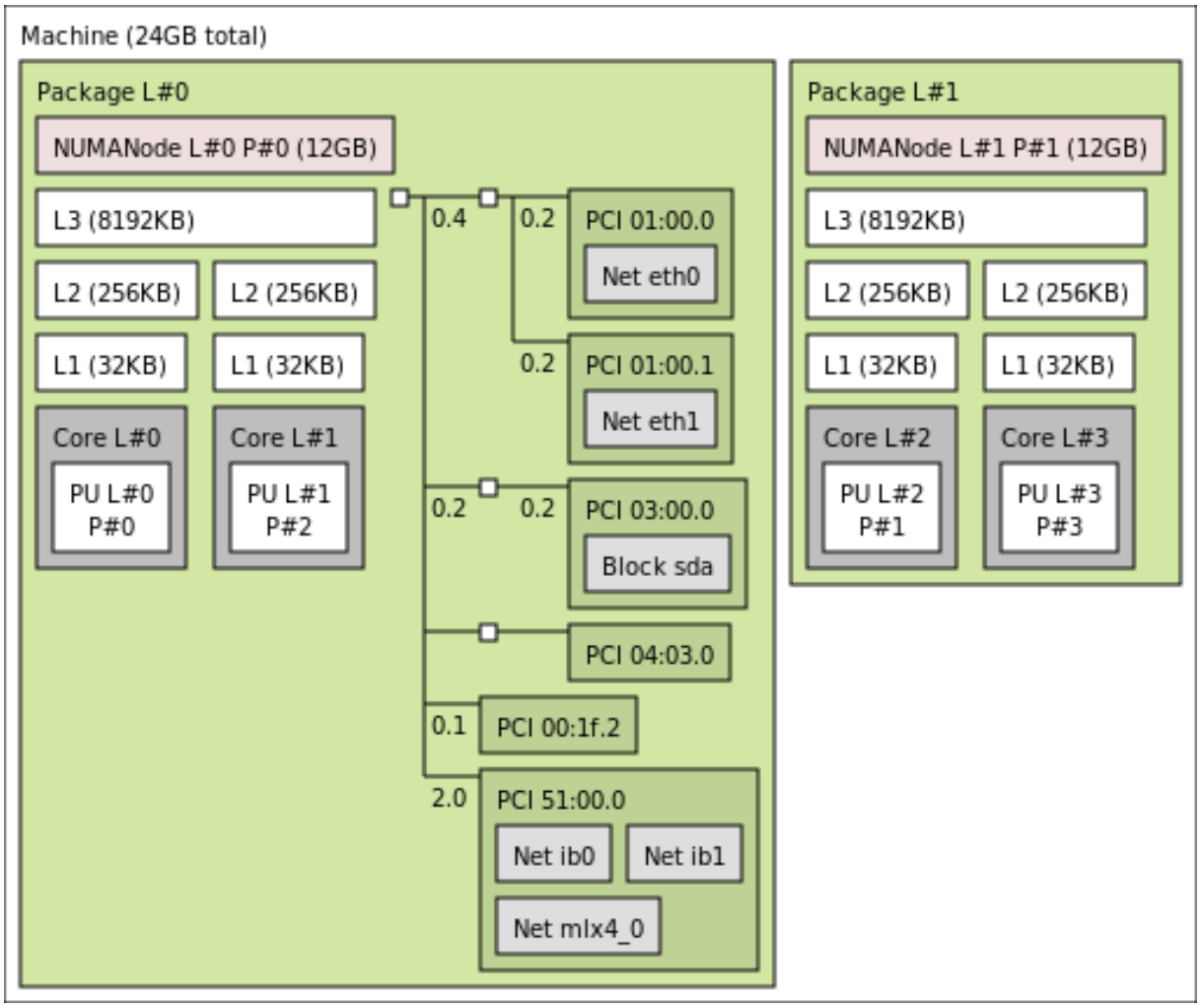

Six interesting PCI devices were discovered (dark green boxes). However, hwloc found some corresponding software devices (*eth0*, *eth1*, *sda*, *mlx4_0*, *ib0*, and *ib1* light grey boxes) for only four of these physical devices. The other ones (*PCI 04:03.0* and *PCI 00:1f.2*) are an unused IDE controller (no disk attached) and a graphic card (no corresponding software device reported to the user by the operating system).
On the contrary, it should be noted that three different software devices were found for the last PCI device (*PCI 51:00.0*). Indeed this OpenFabrics HCA PCI device object contains one OpenFabrics software device (*mlx4_0*) and two virtual network interfaces (*ib0* and *ib1*).
Here is the corresponding textual output:

```
Machine (24GB total)
  Package L#0
    NUMANode L#0 (P#0 12GB)
    L3 L#0 (8192KB)
      L2 L#0 (256KB) + L1 L#0 (32KB) + Core L#0 + PU L#0 (P#0)
      L2 L#1 (256KB) + L1 L#1 (32KB) + Core L#1 + PU L#1 (P#2)
    HostBridge
      PCIBridge
        PCI 01:00.0 (Ethernet)
          Net "eth0"
        PCI 01:00.1 (Ethernet)
          Net "eth1"
      PCIBridge
        PCI 03:00.0 (RAID)
          Storage "sda"
      PCIBridge
        PCI 04:03.0 (VGA)
      PCI 00:1f.2 (IDE)
      PCI 51:00.0 (InfiniBand)
        Net "ib0"
        Net "ib1"
        Net "mlx4_0"
```

```
Package L#1
  NUMANode L#1 (P#1 12GB)
  L3 L#1 (8192KB)
    L2 L#2 (256KB) + L1 L#2 (32KB) + Core L#2 + PU L#2 (P#1)
    L2 L#3 (256KB) + L1 L#3 (32KB) + Core L#3 + PU L#3 (P#3)
```

Chapter 9

Miscellaneous objects

hwloc topologies may be annotated with Misc objects (of type HWLOC_OBJ_MISC) either automatically or by the user. This is a flexible way to annotate topologies with large sets of information since Misc objects may be inserted anywhere in the topology (to annotate specific objects or parts of the topology), even below other Misc objects, and each of them may contain multiple attributes (see also How do I annotate the topology with private notes?).
These Misc objects may have a subtype field to replace Misc with something else in the lstopo output.

9.1 Misc objects added by hwloc

hwloc only uses Misc objects when other object types are not sufficient, and when the Misc object type is not filtered-out anymore. This currently includes:

- Memory modules (DIMMs), on Linux when privileged and when dmi-sysfs is supported by the kernel. These objects have a subtype field of value MemoryModule. They are currently always attached to the root object. Their attributes describe the DIMM vendor, model, etc. lstopo -v displays them as:
```
Misc(MemoryModule) (P#1 DeviceLocation="Bottom-Slot 2(right)" BankLocation="BANK 2" Vendor=Elpida
 SerialNumber=21733667 AssetTag=9876543210 PartNumber="EBJ81UG8EFU0-GN-F ")
```
- Displaying process binding in lstopo --top. These objects have a subtype field of value Process and a name attribute made of their PID and program name. They are attached below the object they are bound to. The textual lstopo displays them as:
```
PU L#0 (P#0)
  Misc(Process) 4445 myprogram
```

9.2 Annotating topologies with Misc objects

The user may annotate hwloc topologies with its own Misc objects. This can be achieved with hwloc_topology_insert_misc_
as well as hwloc-annotate command-line tool.

Chapter 10

Object attributes

10.1 Normal attributes

hwloc objects have many generic attributes in the hwloc_obj structure, for instance their `logical_index` or `os_index` (see Should I use logical or physical/OS indexes? and how?), `depth` or `name`.
The kind of object is first described by the `obj->type` generic attribute (an integer). OS devices also have a specific `obj->attr->osdev.type` bitmask for distinguishing between NICs, GPUs, etc. For instance a GPU coprocessor has both HWLOC_OBJ_OSDEV_COPROC and HWLOC_OBJ_OSDEV_GPU bits in this bitmask (see also OS devices).
Objects may also have an optional `obj->subtype` pointing to a better description string (displayed by lstopo either in place or after the main `obj->type` attribute):

- NUMA nodes: subtype `DRAM` (for usual main memory), `HBM` (high-bandwidth memory), `SPM` (specific-purpose memory, usually reserved for some custom applications), `NVM` (non-volatile memory when used as main memory), `MCDRAM` (on KNL), `GPUMemory` (on POWER architecture with NVIDIA GPU memory shared over NVLink), `CXL-DRAM` or `CXL-NVM` for CXL DRAM or non-volatile memory. Note that some of these subtypes are guessed by the library, they might be missing or slightly wrong in some corner cases. See Heterogeneous Memory for details, and HWLOC_MEMTIERS and HWLOC_MEMTIERS_GUESS in Environment Variables for tuning these.

- Groups: subtype `Cluster`, `Module`, `Tile`, `Compute Unit`, `Book` or `Drawer` for different architecture-specific groups of CPUs (see also What are these Group objects in my topology?).

- OS devices (see also OS devices):

  - subtype `OpenCL`, `LevelZero`, `CUDA`, `VectorEngine`, `RSMI` (AMD GPU) or `NVML` (NVIDIA GPU) for GPU and/or CoProcessor OS devices.
  - Network: subtype `Slingshot` (HPE Cray Slingshot Cassini HSN) or `BXI` (Bull/Atos BXI HCA).
  - Storage: subtype `Disk`, `Tape`, or `Removable Media Device`.
  - Memory: `NVM` (non-volatile memory), `SPM` (specific-purpose memory), `CXLMem` (CXL volatile ou persistent memory).

- L3 Caches: subtype `MemorySideCache` when hwloc is configured to expose the KNL MCDRAM in Cache mode as a L3.

- PCI devices: subtype `NVSwitch` for NVLink switches (see also NVLinkBandwidth in Distances).

- Misc devices: subtype `MemoryModule` (see also Misc objects added by hwloc)

Each object also contains an `attr` field that, if non NULL, points to a union hwloc_obj_attr_u of type-specific attribute structures. For instance, a L2Cache object `obj` contains cache-specific information in `obj->attr->cache`, such as its size and associativity, cache type. See hwloc_obj_attr_u for details.

10.2 Custom string infos

Aside of these generic attribute fields, hwloc annotates many objects with info attributes made of name and value strings. Each object contains a list of such pairs that may be consulted manually (looking at the object `infos` array field) or using the hwloc_obj_get_info_by_name(). The user may additionally add new name-value pairs to any object using hwloc_obj_add_info(), hwloc_modify_infos() or the hwloc-annotate program.
Some topology-global info attributes (not specific to some objects) are also accessible using hwloc_topology_get_infos().
Here is a non-exhaustive list of attributes that may be automatically added by hwloc. Note that these attributes heavily depend on the ability of the operating system to report them. Many of them will therefore be missing on some OS.

10.2.1 Hardware Platform Information

These info attributes are attached to the root object (Machine).

PlatformName, PlatformModel, PlatformVendor, PlatformBoardID, PlatformRevision,

SystemVersionRegister, ProcessorVersionRegister (Machine) Some POWER/PowerPC-specific attributes describing the platform and processor. Currently only available on Linux. Usually added to Package objects, but can be in Machine instead if hwloc failed to discover any package.

DMIBoardVendor, DMIBoardName, etc. DMI hardware information such as the motherboard and chassis models and vendors, the BIOS revision, etc., as reported by Linux under `/sys/class/dmi/id/`.

SoC0ID, SoC0Family, SoC1Revision, etc. The ID, family and revision of the first system-on-chip (`SoC0`), second (`SoC1`), etc.

MemoryMode, ClusterMode Intel Xeon Phi processor configuration modes. Available if hwloc-dump-hwdata was used (see Why do I need hwloc-dump-hwdata for memory on Intel Xeon Phi processor?) or if hwloc managed to guess them from the NUMA configuration.

The memory mode may be *Cache*, *Flat*, *Hybrid50* (half the MCDRAM is used as a cache) or *Hybrid25* (25% of MCDRAM as cache). The cluster mode may be *Quadrant*, *Hemisphere*, *All2All*, *SNC2* or *SNC4*. See doc/examples/get-knl-modes.c in the source directory for an example of retrieving these attributes.

10.2.2 Operating System Information

These info attributes are attached to the topology itself.

OSName, OSRelease, OSVersion, HostName, Architecture The operating system name, release, version, the hostname and the architecture name, as reported by the Unix `uname` command.

LinuxCgroup The name the Linux control group where the calling process is placed.

WindowsBuildEnvironment Either MinGW or Cygwin when one of these environments was used during build.

10.2.3 hwloc Topology Information

These info attributes are attached to the topology itself.

MemoryTiersNr The number of different memory tiers in the topology, if any. See Heterogeneous Memory.

Backend The name of a hwloc backend/component that added objects in the topology. If several components were combined, multiple Backend pairs may exist, with different values, for instance `x86`, `Linux` and `CUDA`.

SyntheticDescription The description string that was given to hwloc to build this synthetic topology.

hwlocVersion The version number of the hwloc library that was used to generate the topology. If the topology was loaded from XML, this is not the hwloc version that loaded it, but rather the first hwloc instance that exported the topology to XML earlier.

ProcessName The name of the process that contains the hwloc library that was used to generate the topology. If the topology was from XML, this is not the hwloc process that loaded it, but rather the first process that exported the topology to XML earlier.

10.2.4 CPU Information

These info attributes are attached to Package objects, or to the root object (Machine) if package locality information is missing.

CPUModel The processor model name.

CPUVendor, CPUModelNumber, CPUFamilyNumber, CPUStepping The processor vendor name, model number, family number, and stepping number. Currently available for x86 and Xeon Phi processors on most systems, and for ia64 processors on Linux (except CPUStepping).

CPUFamily The family of the CPU, currently only available on Linux on LoongArch platforms.

CPURevision A POWER/PowerPC-specific general processor revision number, currently only available on Linux.

CPUType A Solaris-specific general processor type name, such as "i86pc".

10.2.5 OS Device Information

These info attributes are attached to OS device objects specified in parentheses.

Vendor, Model, Revision, Size, SectorSize (Storage OS devices) The vendor and model names, revision, size (in kibibytes = 1024 bytes, and the value string is suffixed with "KiB") and SectorSize (in bytes).

LinuxDeviceID (Storage OS devices) The major/minor device number such as 8:0 of Linux device.

SerialNumber (Storage and CXL Memory OS devices) The serial number of the device.

CXLRAMSize, CXLPMEMSize (CXL Memory OS devices) The size of the volatile (RAM) or persistent (PMEM) memory in a CXL Type-3 device. Sizes are in kibibytes (1024 bytes), and value strings are suffixed with "KiB".

GPUVendor, GPUModel (GPU and/or Co-Processor OS devices) The vendor and model names of the GPU device.

OpenCLDeviceType, OpenCLPlatformIndex,

OpenCLPlatformName, OpenCLPlatformDeviceIndex (OpenCL OS devices) The type of OpenCL device, the OpenCL platform index and name, and the index of the device within the platform.

OpenCLComputeUnits, OpenCLGlobalMemorySize (OpenCL OS devices) The number of compute units and global memory size of an OpenCL device. Sizes are in kibibytes (1024 bytes), and value strings are suffixed with "KiB".

LevelZeroVendor, LevelZeroModel, LevelZeroBrand,

LevelZeroSerialNumber, LevelZeroBoardNumber (LevelZero OS devices) The name of the vendor, device model, brand of a Level Zero device, and its serial and board numbers.

LevelZeroDriverIndex, LevelZeroDriverDeviceIndex (LevelZero OS devices) The index of the Level Zero driver within the list of drivers, and the index of the device within the list of devices managed by this driver.

LevelZeroUUID (LevelZero OS devices or subdevices) The UUID of the device or subdevice.

LevelZeroSubdevices (LevelZero OS devices) The number of subdevices below this OS device.

LevelZeroSubdeviceID (LevelZero OS subdevices) The index of this subdevice within its parent.

LevelZeroDeviceType (LevelZero OS devices or subdevices) A string describing the type of device, for instance "GPU", "CPU", "FPGA", etc.

LevelZeroNumSlices, LevelZeroNumSubslicesPerSlice,

LevelZeroNumEUsPerSubslice, LevelZeroNumThreadsPerEU (LevelZero OS devices or subdevices) The number of slices in the device, of subslices per slice, of execution units (EU) per subslice, and of threads per EU.

LevelZeroHBMSize, LevelZeroDDRSize, LevelZeroMemorySize (LevelZero OS devices or subdevices) The amount of HBM or DDR memory of a LevelZero device or subdevice. Sizes are in kibibytes (1024 bytes), and value strings are suffixed with "KiB". If the type of memory could not be determined, the generic name LevelZeroMemorySize is used. For devices that contain subdevices, the amount reported in the root device includes the memories of all its subdevices.

LevelZeroCQGroups, LevelZeroCQGroup2 (LevelZero OS devices or subdevices) The number of completion queue groups, and the description of the third group (as `N*0xX` where `N` is the number of queues in the group, and `0xX` is the hexadecimal bitmask of `ze_command_queue_group_property_flag_t` listing properties of those queues).

AMDUUID, AMDSerial (RSMI GPU OS devices) The UUID and serial number of AMD GPUs.

RSMIVRAMSize, RSMIVisibleVRAMSize, RSMIGTTSize (RSMI GPU OS devices) The amount of GPU memory (VRAM), of GPU memory that is visible from the host (Visible VRAM), and of system memory that is usable by the GPU (Graphics Translation Table). Sizes are in kibibytes (1024 bytes), and value strings are suffixed with "KiB".

XGMIHiveID (RSMI GPU OS devices) The ID of the group of GPUs (Hive) interconnected by XGMI links

XGMIPeers (RSMI GPU OS devices) The list of RSMI OS devices that are directly connected to the current device through XGMI links. They are given as a space-separated list of object names, for instance *rsmi2 rsmi3*.

NVIDIAUUID, NVIDIASerial (NVML GPU OS devices) The UUID and serial number of NVIDIA GPUs.

CUDAMultiProcessors, CUDACoresPerMP,

CUDAGlobalMemorySize, CUDAL2CacheSize, CUDASharedMemorySizePerMP (CUDA OS devices) The number of shared multiprocessors, the number of cores per multiprocessor, the global memory size, the (global) L2 cache size, and size of the shared memory in each multiprocessor of a CUDA device. Sizes are in kibibytes (1024 bytes), and value strings are suffixed with "KiB".

VectorEngineModel, VectorEngineSerialNumber (VectorEngine OS devices) The model and serial number of a VectorEngine device.

VectorEngineCores, VectorEngineMemorySize, VectorEngineLLCSize,

VectorEngineL2Size, VectorEngineL1dSize, VectorEngineL1iSize (VectorEngine OS devices) The number of cores, memory size, and the sizes of the (global) last level cache and of L2, L1d and L1i caches of a VectorEngine device. Sizes are in kibibytes (1024 bytes), and value strings are suffixed with "KiB".

VectorEngineNUMAPartitioned (VectorEngine OS devices) If this attribute exists, the VectorEngine device is configured in partitioned mode with multiple NUMA nodes.

Address, Port (Network interface OS devices) The MAC address and the port number of a software network interface, such as `eth4` on Linux.

NodeGUID, SysImageGUID, Port1State, Port2LID, Port2LMC, Port3GID1 (OpenFabrics OS devices) The node GUID and GUID mask, the state of a port #1 (value is 4 when active), the LID and LID mask count of port #2, and GID #1 of port #3.

BXIUUID (OpenFabrics BXI OS devices) The UUID of an Atos/Bull BXI HCA.

10.2.6 Other Object-specific Information

These info attributes are attached to objects specified in parentheses.

MemoryTier (NUMA Nodes) The rank of the memory tier of this node. Ranks start from 0 for highest bandwidth nodes. The attribute is only set if multiple tiers are found. See Heterogeneous Memory.

CXLDevice (NUMA Nodes or DAX Memory OS devices) The PCI/CXL bus ID of a device whose CXL Type-3 memory is exposed here. If multiple devices are interleaved, their bus IDs are separated by commas, and the number of devices in reported in CXLDeviceInterleaveWays.

CXLDeviceInterleaveWays (NUMA Nodes or DAX Memory OS devices) If multiple CXL devices are interleaved, this attribute shows the number of devices (and the number of bus IDs in the CXLDevice attributes).

DAXDevice (NUMA Nodes) The name of the Linux DAX device that was used to expose a non-volatile memory region as a volatile NUMA node.

DAXType (NUMA Nodes or DAX Memory OS devices) The type of memory exposed in a Linux DAX device or in the corresponding NUMA node, either "NVM" (non-volatile memory) or "SPM" (specific-purpose memory).

DAXParent (NUMA Nodes or DAX Memory OS devices) A string describing the Linux sysfs hierarchy that exposes the DAX device, for instance containing "hmem1" for specific-purpose memory or "ndbus0" for NVD↩ IMMs.

PCIBusID (GPUMemory NUMA Nodes) The PCI bus ID of the GPU whose memory is exposed in this NUMA node.

Inclusive (Caches) The inclusiveness of a cache (1 if inclusive, 0 otherwise). Currently only available on x86 processors.

SolarisProcessorGroup (Group) The Solaris kstat processor group name that was used to build this Group object.

PCIVendor, PCIDevice (PCI devices and bridges) The vendor and device names of the PCI device.

PCISlot (PCI devices or Bridges) The name/number of the physical slot where the device is plugged. If the physical device contains PCI bridges above the actual PCI device, the attribute may be attached to the highest bridge (i.e. the first object that actually appears below the physical slot).

Vendor, AssetTag, PartNumber, DeviceLocation, BankLocation, FormFactor, Type, Size, Rank (MemoryModule Misc objects) Information about memory modules (DIMMs) extracted from SMBIOS. Size is in kibibytes (1024 bytes), and the value string is suffixed with "KiB".

10.2.7 User-Given Information

Here is a non-exhaustive list of user-provided info attributes that have a special meaning:

lstopoStyle Enforces the style of an object (background and text colors) in the graphical output of lstopo. See CUSTOM COLORS in the lstopo(1) manpage for details.

Chapter 11

Topology Attributes: Distances, Memory Attributes and CPU Kinds

Besides the hierarchy of objects, individual object attributes and topology info attributes (see Object attributes), hwloc may also expose finer information about the hardware organization.

11.1 Distances

A machine with 4 CPUs may have identical links between every pairs of CPUs, or those CPUs could also only be connected through a ring. In the ring case, accessing the memory of nearby CPUs is slower than local memory, but it is also faster than accessing the memory of CPU on the opposite side of the ring. These deep details cannot be exposed in the hwloc hierarchy, that is why hwloc also exposes distances.
Distances are matrices of values between sets of objects, usually latencies or bandwidths. By default, hwloc tries to get a matrix of relative latencies between NUMA nodes when exposed by the hardware.
In the aforementioned ring case, the matrix could report 10 for latency between a NUMA node and itself, 20 for nearby nodes, and 30 for nodes that are opposites on the ring. Those are theoretical values exposed by hardware vendors (in the System Locality Distance Information Table (SLIT) in the ACPI) rather than physical latencies. They are mostly meant for comparing node relative distances.
Distances structures currently created by hwloc are:

NUMALatency (Linux, Solaris, FreeBSD) This is the matrix of theoretical latencies described above.

XGMIBandwidth (RSMI) This is the matrix of unidirectional XGMI bandwidths between AMD GPUs (in MB/s). It contains 0 when there is no direct XGMI link between objects. Values on the diagonal are artificially set to very high so that local access always appears faster than remote access.

GPUs are identified by RSMI OS devices such as "rsmi0". They may be converted into the corresponding OpenCL or PCI devices using hwloc_get_obj_with_same_locality() or the hwloc-annotate tool.

hwloc_distances_transform() or hwloc-annotate may also be used to transform this matrix into something more convenient, for instance by replacing bandwidths with numbers of links between peers.

XGMIHops (RSMI) This matrix lists the number of XGMI hops between AMD GPUs. It reports 1 when there is a direct link between two distinct GPUs. If there is no XGMI route between them, the value is 0. The number of hops between a GPU and itself (on the diagonal) is 0 as well.

XeLinkBandwidth (LevelZero) This is the matrix of unidirectional XeLink bandwidths between Intel GPUs (in MB/s). It contains 0 when there is no direct XeLink between objects. When there are multiple links, their bandwidth is aggregated.

Values on the diagonal are artificially set to very high so that local access always appears faster than remote access. This includes bandwidths between a (sub)device and itself, between a subdevice and its parent device, or between two subdevices of the same parent.

The matrix interconnects all LevelZero devices and subdevices (if any), even if some of them may have no link at all.

The bandwidths of links between subdevices are accumulated in the bandwidth between their parents.

NVLinkBandwidth (NVML) This is the matrix of unidirectional NVLink bandwidths between NVIDIA GPUs (in MB/s). It contains 0 when there is no direct NVLink between objects. When there are multiple links, their bandwidth is aggregated. Values on the diagonal are artificially set to very high so that local access always appears faster than remote access.

On POWER platforms, NVLinks may also connects GPUs to CPUs. On NVIDIA platforms such as DGX-2, a NVSwitch may interconnect GPUs through NVLinks. In these cases, the distances structure is heterogeneous. GPUs always appear first in the matrix (as NVML OS devices such as "nvml0"), and non-GPU objects may appear at the end (Package for POWER processors, PCI device for NVSwitch).

NVML OS devices may be converted into the corresponding CUDA, OpenCL or PCI devices using hwloc_get_obj_with_same_locality() or the hwloc-annotate tool.

hwloc_distances_transform() or hwloc-annotate may also be used to transform this matrix into something more convenient, for instance by removing switches or CPU ports, or by replacing bandwidths with numbers of links between peers.

When a NVSwitch interconnects GPUs, only links between one GPU and different NVSwitch ports are reported. They may be merged into a single switch port with hwloc_distances_transform() or hwloc-annotate. Or a transitive closure may also be applied to report the bandwidth between GPUs across the NVSwitch.

Users may also specify their own matrices between any set of objects, even if these objects are of different types (e.g. bandwidths between GPUs and CPUs).
The entire API is located in hwloc/distances.h. See also Retrieve distances between objects, as well as Helpers for consulting distance matrices and Add distances between objects.

11.2 Memory Attributes

Machines with heterogeneous memory, for instance high-bandwidth memory (HBM), normal memory (DDR), and/or high-capacity slow memory (such as non-volatile memory DIMMs, NVDIMMs) require applications to allocate buffers in the appropriate target memory depending on performance and capacity needs. Those target nodes may be exposed in the hwloc hierarchy as different memory children but there is a need for performance information to select the appropriate one.
hwloc memory attributes are designed to expose memory information such as latency, bandwidth, etc. Users may also specify their own attributes and values.
The memory attributes API is located in hwloc/memattrs.h, see Comparing memory node attributes for finding where to allocate on and Managing memory attributes for details. See also an example in doc/examples/memory-attributes.c in the source tree.
Memory attributes are the low-level solution to selecting target memory. hwloc uses them internally to build Memory Tiers which provide an easy way to distinguish NUMA nodes of different kinds, as explained in Heterogeneous Memory.

11.3 CPU Kinds

Hybrid CPUs may contain different kinds of cores. The CPU kinds API in hwloc/cpukinds.h provides a way to list the sets of PUs in each kind and get some optional information about their hardware characteristics and efficiency.
If the operating system provides efficiency information (e.g. Windows 10, MacOS X / Darwin and some Linux kernels), it is used to rank hwloc CPU kinds by efficiency. Otherwise, hwloc implements several heuristics based on frequencies and core types (see HWLOC_CPUKINDS_RANKING in Environment Variables).
The ranking shows energy-efficient CPUs first, and high-performance power-hungry cores last.
These CPU kinds may be annotated with the following native attributes:

FrequencyMaxMHz (Linux) The maximal operating frequency of the core, as reported by `cpufreq` drivers on Linux.

FrequencyBaseMHz (Linux) The base operating frequency of the core, as reported by some `cpufreq` drivers on Linux (e.g. `intel_pstate`).

CoreType (x86) A string describing the kind of core, currently `IntelAtom` or `IntelCore`, as reported by the x86 CPUID instruction and Linux PMU on some Intel processors.

LinuxCapacity (Linux) The Linux-specific CPU capacity found in sysfs, as reported by the Linux kernel on some recent platforms. Higher values usually mean that the Linux scheduler considers the core as high-performance rather than energy-efficient.

LinuxCPUType (Linux) The Linux-specific CPU type found in sysfs, such as `intel_atom_0`, as reported by future Linux kernels on some Intel processors.

DarwinCompatible (Darwin / Mac OS X) The compatibility attribute of the CPUs as found in the IO registry on Darwin / Mac OS X. For instance `apple,icestorm;ARM,v8` for energy-efficient cores and `apple,firestorm;ARM,v8` on performance cores on Apple M1 CPU.

See Kinds of CPU cores for details.

Chapter 12

Heterogeneous Memory

Heterogeneous memory hardware exposes different NUMA nodes for different memory technologies. On the image below, a dual-socket server has both HBM (high bandwidth memory) and usual DRAM connected to each socket, as well as some CXL memory connected to the entire machine.

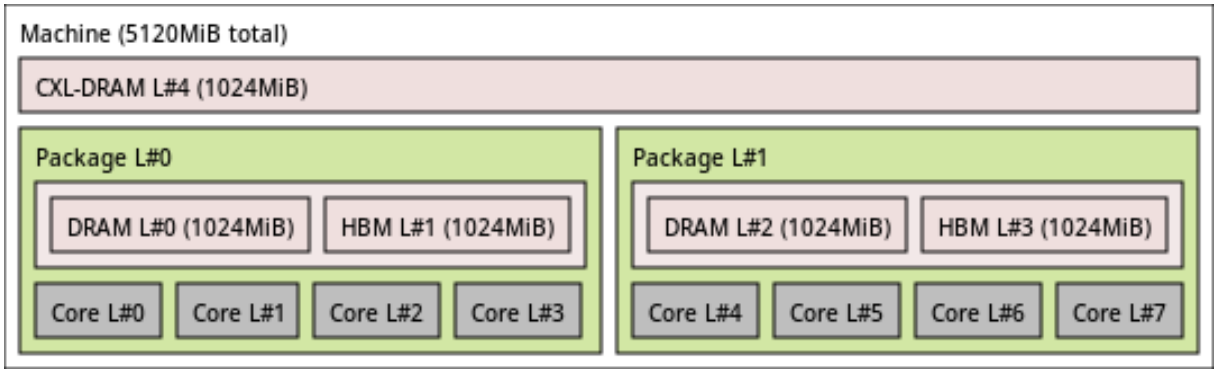

The hardware usually exposes "normal" memory first because it is where "normal" data buffers should be allocated by default. However there is no guarantee about whether HBM, NVM, CXL will appear second. Hence there is a need to explicit memory technologies and performance to help users decide where to allocate.

12.1 Memory Tiers

hwloc builds *Memory Tiers* to identify different kinds of NUMA nodes. On the above machine, the first tier would contain both HBM NUMA nodes (L#1 and L#3), while the second tier would contain both DRAM nodes (L#0 and L#2), and the CXL memory (L#4) would be in the third tier. NUMA nodes are then annotated accordingly:

- Each node object has its `subtype` field set to `HBM`, `DRAM` or `CXL-DRAM` (see other possible values in Normal attributes).
- Each node also has a string info attribute with name `MemoryTier` and value `0` for the first tier, `1` for the second, etc.

Tiers are built using two kinds of information:

- First hwloc looks into operating system information to find out whether a node is non-volatile, CXL, special-purpose, etc.
- Then it combines that knowledge with performance metrics exposed by the hardware to guess what's actually DRAM, HBM, etc. These metrics are also exposed in hwloc Memory Attributes, for instance bandwidth and latency, for read and write. See Memory Attributes and Comparing memory node attributes for finding where to allocate on for more details.

Once nodes with similar or different characteristics are identified, they are placed in tiers. Tiers are then sorted by bandwidth so that the highest bandwidth is ranked first, etc.
If hwloc fails to build tiers properly, see `HWLOC_MEMTIERS` and `HWLOC_MEMTIERS_GUESS` in Environment Variables.

12.2 Using Heterogeneous Memory from the command-line

Tiers may be specified in location filters when using NUMA nodes in hwloc command-line tools. For instance, binding memory on the first HBM node (`numa[hbm]:0`) is actually equivalent to binding on the second node (`numa:1`) on our example platform:

```
$ hwloc-bind --membind 'numa[hbm]:0' -- myprogram
$ hwloc-bind --membind 'numa:1' -- myprogram
```

To count DRAM nodes in the first CPU package, or all nodes:

```
$ hwloc-calc -N 'numa[dram]' package:0
1
$ hwloc-calc -N 'numa' package:0
2
```

To list all the physical indexes of Tier-0 NUMA nodes (HBM P#2 and P#3 not shown on the figure):

```
$ hwloc-calc -I 'numa[tier=0]' -p all
2,3
```

The number of tiers may be retrieved by looking at topology attributes:

```
$ hwloc-info --get-attr "info MemoryTiersNr" topology
2
```

hwloc-calc and hwloc-bind also have options such as `--local-memory` and `--best-memattr` to select the best NUMA node among the local ones. For instance, the following command-lines say that, among nodes near node:0 (DRAM L#0), the best one for latency is itself while the best one for bandwidth is node:1 (HBM L#1).

```
$ hwloc-calc --best-memattr latency node:0
0
$ hwloc-calc --best-memattr bandwidth node:0
1
```

12.3 Using Heterogeneous Memory from the C API

There are two major changes introduced by heterogeneous memory when looking at the hierarchical tree of objects.

- First, there may be multiple memory children attached at the same place. For instance, each Package in the above image has two memory children, one for the DRAM NUMA node, and another one for the HBM node.
- Second, memory children may be attached at different levels. In the above image, CXL memory is attached to the root Machine object instead of below a Package.

Hence, one may have to rethink the way it selects NUMA nodes.

12.3.1 Iterating over the list of (heterogeneous) NUMA nodes

A common need consists in iterating over the list of NUMA nodes (e.g. using hwloc_get_next_obj_by_type()). This is useful for counting some domains before partitioning a job, or for finding a node that is local to some objects. With heterogeneous memory, one should remember that multiple nodes may now have the same locality (HBM and DRAM above) or overlapping localities (e.g. DRAM and CXL above). Checking NUMA node subtype or tier attributes is a good way to avoid this issue by ignoring nodes of different kinds.
Another solution consists in ignoring nodes whose cpuset overlap the previously selected ones. For instance, in the above example, one could first select DRAM L#0 but ignore HBM L#1 (because it overlaps with DRAM L#0), then select DRAM L#2 but ignore HBM L#3 and CXL L#4 (overlap wih DRAM L#2).

It is also possible to iterate over the memory parents (e.g. Packages in our example) and select only one memory child for each of them. hwloc_get_memory_parents_depth() may be used to find the depth of these parents. However this method only works if all memory parents are at the same level. It would fail in our example: the root Machine object also has a memory child (CXL), hence hwloc_get_memory_parents_depth() would returns HWLOC_TYPE_DEPTH_MULTIPLE.

12.3.2 Iterating over local (heterogeneous) NUMA nodes

Another common need is to find NUMA nodes that are local to some objects (e.g. a Core). A basic solution consists in looking at the Core nodeset and iterating over NUMA nodes to select those whose nodeset are included. A nicer solution is to walk up the tree to find ancestors with a memory child. With heterogeneous memory, multiple such ancestors may exist (Package and Machine in our example) and they may have multiple memory children.
Both these methods may be replaced with hwloc_get_local_numanode_objs() which provides a convenient and flexible way to retrieve local NUMA nodes. One may then iterate over the returned array to select the appropriate one(s) depending on their subtype, tier or performance attributes.

hwloc_memattr_get_best_target() is also a convenient way to select the best local NUMA node according to performance metrics. See also Comparing memory node attributes for finding where to allocate on.

Chapter 13

Importing and exporting topologies from/to XML files

hwloc offers the ability to export topologies to XML files and reload them later. This is for instance useful for loading topologies faster (see I do not want hwloc to rediscover my enormous machine topology every time I rerun a process), manipulating other nodes' topology, or avoiding the need for privileged processes (see Does hwloc require privileged access?).
Topologies may be exported to XML files thanks to hwloc_topology_export_xml(), or to a XML memory buffer with hwloc_topology_export_xmlbuffer(). The lstopo program can also serve as a XML topology export tool.
XML topologies may then be reloaded later with hwloc_topology_set_xml() and hwloc_topology_set_xmlbuffer().
The HWLOC_XMLFILE environment variable also tells hwloc to load the topology from the given XML file (see Environment Variables).

Note

Loading XML topologies disables binding because the loaded topology may not correspond to the physical machine that loads it. This behavior may be reverted by asserting that loaded file really matches the underlying system with the HWLOC_THISSYSTEM environment variable or the HWLOC_TOPOLOGY_FLAG_IS_THISSYSTEM topology flag.

The topology flag HWLOC_TOPOLOGY_FLAG_THISSYSTEM_ALLOWED_RESOURCES may be used to load a XML topology that contains the entire machine and restrict it to the part that is actually available to the current process (e.g. when Linux Cgroup/Cpuset are used to restrict the set of resources).

hwloc also offers the ability to export/import Topology differences.

XML topology files are not localized. They use a dot as a decimal separator. Therefore any exported topology can be reloaded on any other machine without requiring to change the locale.

XML exports contain all details about the platform. It means that two very similar nodes still have different XML exports (e.g. some serial numbers or MAC addresses are different). If a less precise exporting/importing is required, one may want to look at Synthetic topologies instead.

13.1 libxml2 and minimalistic XML backends

hwloc offers two backends for importing/exporting XML.
First, it can use the libxml2 library for importing/exporting XML files. It features full XML support, for instance when those files have to be manipulated by non-hwloc software (e.g. a XSLT parser). The libxml2 backend is enabled by default if libxml2 development headers are available (the relevant development package is usually `libxml2-devel` or `libxml2-dev`).
If libxml2 is not available at configure time, or if `--disable-libxml2` is passed, hwloc falls back to a custom backend. Contrary to the aforementioned full XML backend with libxml2, this minimalistic XML backend cannot be guaranteed to work with external programs. It should only be assumed to be compatible with the same hwloc release (even if using the libxml2 backend). Its advantage is, however, to always be available without requiring any external dependency.
If libxml2 is available but the core hwloc library should not directly depend on it, the libxml2 support may be built as a dynamicall-loaded plugin. One should pass `--enable-plugins` to enable plugin support (when supported) and build as plugins all component that support it. Or pass `--enable-plugins=xml_libxml` to only build this libxml2 support as a plugin.

13.2 XML import error management

Importing XML files can fail at least because of file access errors, invalid XML syntax, non-hwloc-valid XML contents, or incompatibilities between hwloc releases (see Are XML topology files compatible between hwloc releases?).
Both backend cannot detect all these errors when the input XML file or buffer is selected (when hwloc_topology_set_xml() or hwloc_topology_set_xmlbuffer() is called). Some errors such non-hwloc-valid contents can only be detected later when loading the topology with hwloc_topology_load().
It is therefore strongly recommended to check the return value of both hwloc_topology_set_xml() (or hwloc_topology_set_xmlbuffer()) and hwloc_topology_load() to handle all these errors.

Chapter 14

Synthetic topologies

hwloc may load fake or remote topologies so as to consult them without having the underlying hardware available. Aside from loading XML topologies, hwloc also enables the building of *synthetic* topologies that are described by a single string listing the arity of each levels.
For instance, lstopo may create a topology made of 2 packages, containing a single NUMA node and a L2 cache above two single-threaded cores:

```
$ lstopo -i "pack:2 node:1 l2:1 core:2 pu:1" -
Machine (2048MB)
  Package L#0
    NUMANode L#0 (P#0 1024MB)
    L2 L#0 (4096KB)
      Core L#0 + PU L#0 (P#0)
      Core L#1 + PU L#1 (P#1)
  Package L#1
    NUMANode L#1 (P#1 1024MB)
    L2 L#1 (4096KB)
      Core L#2 + PU L#2 (P#2)
      Core L#3 + PU L#3 (P#3)
```

Replacing - with `file.xml` in this command line will export this topology to XML as usual.

Note

Synthetic topologies offer a very basic way to export a topology and reimport it on another machine. It is a lot less precise than XML but may still be enough when only the hierarchy of resources matters.

14.1 Synthetic description string

Each item in the description string gives the type of the level and the number of such children under each object of the previous level. That is why the above topology contains 4 cores (2 cores times 2 nodes).
These type names must be written as `numanode`, `package`, `core`, `l2u`, `l1i`, `pu`, `group` (hwloc_obj_type_↩ sscanf() is used for parsing the type names). They do not need to be written case-sensitively, nor entirely (as long as there is no ambiguity, 2 characters such as `ma` select a Machine level). Note that I/O and Misc objects are not available.
Instead of specifying the type of each level, it is possible to just specify the arities and let hwloc choose all types according to usual topologies. The following examples are therefore equivalent:

```
$ lstopo -i "2 3 4 5 6"
$ lstopo -i "Package:2 NUMANode:3 L2Cache:4 Core:5 PU:6"
```

NUMA nodes are handled in a special way since they are not part of the main CPU hierarchy but rather attached below it as memory children. Thus, `NUMANode:3` actually means `Group:3` where one NUMA node is attached below each group. These groups are merged back into the parent when possible (typically when a single NUMA node is requested below each parent).
It is also possible the explicitly attach NUMA nodes to specific levels. For instance, a topology similar to a Intel Xeon Phi processor (with 2 NUMA nodes per 16-core group) may be created with:

```
$ lstopo -i "package:1 group:4 [numa] [numa] core:16 pu:4"
```

The root object does not appear in the synthetic description string since it is always a Machine object. Therefore the Machine type is disallowed in the description as well.
A NUMA level (with a single NUMA node) is automatically added if needed.
Each item may be followed parentheses containing a list of space-separated attributes. For instance:

- `L2iCache:2(size=32kB)` specifies 2 children of 32kB level-2 instruction caches. The size may be specified in bytes (without any unit suffix) or as kB, KiB, MB, MiB, etc.
- `NUMANode:3(memory=16MB)` specifies 3 NUMA nodes with 16MB each. The size may be specified in bytes (without any unit suffix) or as GB, GiB, TB, TiB, etc.
- `PU:2(indexes=0,2,1,3)` specifies 2 PU children and the full list of OS indexes among the entire set of 4 PU objects.
- `PU:2(indexes=numa:core)` specifies 2 PU children whose OS indexes are interleaved by NUMA node first and then by package.
- Attributes in parentheses at the very beginning of the description apply to the root object.

hwloc command-line tools may modify a synthetic topology, for instance to customize object attributes, or to remove some objects to make the topology heterogeneous or asymmetric. See many examples in How do I create a custom heterogeneous and asymmetric topology?.

14.2 Loading a synthetic topology

Aside from lstopo, the hwloc programming interface offers the same ability by passing the synthetic description string to hwloc_topology_set_synthetic() before hwloc_topology_load().
Synthetic topologies are created by the `synthetic` component. This component may be enabled by force by setting the HWLOC_SYNTHETIC environment variable to something such as `node:2 core:3 pu:4`.
Loading a synthetic topology disables binding support since the topology usually does not match the underlying hardware. Binding may be reenabled as usual by setting HWLOC_THISSYSTEM=1 in the environment or by setting the HWLOC_TOPOLOGY_FLAG_IS_THISSYSTEM topology flag.

14.3 Exporting a topology as a synthetic string

The function hwloc_topology_export_synthetic() may export a topology as a synthetic string. It offers a convenient way to quickly describe the contents of a machine. The lstopo tool may also perform such an export by forcing the output format.

```
$ lstopo --of synthetic --no-io
Package:1 L3Cache:1 L2Cache:2 L1dCache:1 L1iCache:1 Core:1 PU:2
```

The exported string may be passed back to hwloc for recreating another similar topology (see also Are synthetic strings compatible between hwloc releases?). The entire tree will be similar, but some attributes such as the processor model will be missing.
Such an export is only possible if the topology is totally symmetric. It means that the `symmetric_subtree` field of the root object is set. Also memory children should be attached in a symmetric way (e.g. the same number of memory children below each Package object, etc.). However, I/O devices and Misc objects are ignored when looking at symmetry and exporting the string.

Chapter 15

Interoperability With Other Software

Although hwloc offers its own portable interface, it still may have to interoperate with specific or non-portable libraries that manipulate similar kinds of objects. hwloc therefore offers several specific "helpers" to assist converting between those specific interfaces and hwloc.
Some external libraries may be specific to a particular OS; others may not always be available. The hwloc core therefore generally does not explicitly depend on these types of libraries. However, when a custom application uses or otherwise depends on such a library, it may optionally include the corresponding hwloc helper to extend the hwloc interface with dedicated helpers.
Most of these helpers use structures that are specific to these external libraries and only meaningful on the local machine. If so, the helper requires the input topology to match the current machine. Some helpers also require I/O device discovery to be supported and enabled for the current topology.

Linux specific features hwloc/linux.h offers Linux-specific helpers that utilize some non-portable features of the Linux system, such as binding threads through their thread ID ("tid") or parsing kernel CPU mask files. See Linux-specific helpers.

Windows specific features hwloc/windows.h offers Windows-specific helpers to query information about Windows processor groups. See Windows-specific helpers.

Linux libnuma hwloc/linux-libnuma.h provides conversion helpers between hwloc CPU sets and libnuma-specific types, such as bitmasks. It helps you use libnuma memory-binding functions with hwloc CPU sets. See Interoperability with Linux libnuma bitmask and Interoperability with Linux libnuma unsigned long masks.

Glibc hwloc/glibc-sched.h offers conversion routines between Glibc and hwloc CPU sets in order to use hwloc with functions such as sched_getaffinity() or pthread_attr_setaffinity_np(). See Interoperability with glibc sched affinity.

OpenFabrics Verbs hwloc/openfabrics-verbs.h helps interoperability with the OpenFabrics Verbs interface. For example, it can return a list of processors near an OpenFabrics device. It may also return the corresponding OS device hwloc object for further information (if I/O device discovery is enabled). See Interoperability with OpenFabrics.

OpenCL hwloc/opencl.h enables interoperability with the OpenCL interface. Only the AMD and NVIDIA implementations currently offer locality information. It may return the list of processors near a GPU given as a `cl_device_id`. It may also return the corresponding OS device hwloc object for further information (if I/O device discovery is enabled). See Interoperability with OpenCL.

oneAPI Level Zero hwloc/levelzero.h enables interoperability with the oneAPI Level Zero interface. It may return the list of processors near an accelerator or GPU. It may also return the corresponding OS device hwloc object for further information (if I/O device discovery is enabled). See Interoperability with the oneAPI Level Zero interface..

AMD ROCm SMI Library (RSMI) hwloc/rsmi.h enables interoperability with the AMD ROCm SMI interface. It may return the list of processors near an AMD GPU. It may also return the corresponding OS device hwloc object for further information (if I/O device discovery is enabled). See Interoperability with the ROCm SMI Management Library.

NVIDIA CUDA hwloc/cuda.h and hwloc/cudart.h enable interoperability with NVIDIA CUDA Driver and Runtime interfaces. For instance, it may return the list of processors near NVIDIA GPUs. It may also return the

corresponding OS device hwloc object for further information (if I/O device discovery is enabled). See Interoperability with the CUDA Driver API and Interoperability with the CUDA Runtime API.

NVIDIA Management Library (NVML) hwloc/nvml.h enables interoperability with the NVIDIA NVML interface. It may return the list of processors near a NVIDIA GPU given as a `nvmlDevice_t`. It may also return the corresponding OS device hwloc object for further information (if I/O device discovery is enabled). See Interoperability with the NVIDIA Management Library.

NVIDIA displays hwloc/gl.h enables interoperability with NVIDIA displays using the NV-CONTROL X extension (NVCtrl library). If I/O device discovery is enabled, it may return the OS device hwloc object that corresponds to a display given as a name such as *:0.0* or given as a port/device pair (server/screen). See Interoperability with OpenGL displays.

Taskset command-line tool The taskset command-line tool is widely used for binding processes. It manipulates CPU set strings in a format that is slightly different from hwloc's one (it does not divide the string in fixed-size subsets and separates them with commas). To ease interoperability, hwloc offers routines to convert hwloc CPU sets from/to taskset-specific string format. See for instance hwloc_bitmap_taskset_snprintf() in The bitmap API.

Most hwloc command-line tools also support the option `--cpuset-output-format taskset` to manipulate taskset-specific strings.

Chapter 16

Thread Safety

Like most libraries that mainly fill data structures, hwloc is not thread safe but rather reentrant: all state is held in a hwloc_topology_t instance without mutex protection. That means, for example, that two threads can safely operate on and modify two different hwloc_topology_t instances, but they should not simultaneously invoke functions that modify the *same* instance. Similarly, one thread should not modify a hwloc_topology_t instance while another thread is reading or traversing it. However, two threads can safely read or traverse the same hwloc_topology_t instance concurrently.

When running in multiprocessor environments, be aware that proper thread synchronization and/or memory coherency protection is needed to pass hwloc data (such as hwloc_topology_t pointers) from one processor to another (e.g., a mutex, semaphore, or a memory barrier). Note that this is not a hwloc-specific requirement, but it is worth mentioning.

For reference, hwloc_topology_t modification operations include (but may not be limited to):

Creation and destruction `hwloc_topology_init()`, `hwloc_topology_load()`, `hwloc_topology_destroy(` (see Topology Creation and Destruction) imply major modifications of the structure, including freeing some objects. No other thread cannot access the topology or any of its objects at the same time.

Also references to objects inside the topology are not valid anymore after these functions return.

Runtime topology modifications `hwloc_topology_insert_misc_object()`, `hwloc_topology_alloc_group_o` and `hwloc_topology_insert_group_object()` (see Modifying a loaded Topology) may modify the topology significantly by adding objects inside the tree, changing the topology depth, etc.

`hwloc_distances_add_commit()` and `hwloc_distances_remove()` (see Add distances between objects) modify the list of distance structures in the topology, and the former may even insert new Group objects.

`hwloc_memattr_register()` and `hwloc_memattr_set_value()` (see Managing memory attributes) modify the memory attributes of the topology.

`hwloc_topology_restrict()` modifies the topology even more dramatically by removing some objects.

`hwloc_topology_refresh()` updates some internal cached structures. (see below).

Although references to former objects *may* still be valid after insertion or restriction, it is strongly advised to not rely on any such guarantee and always re-consult the topology to reacquire new instances of objects.

Consulting distances `hwloc_distances_get()` and its variants are thread-safe except if the topology was recently modified (because distances may involve objects that were removed).

Whenever the topology is modified (see above), `hwloc_topology_refresh()` should be called in the same thread-safe context to force the refresh of internal distances structures. A call to `hwloc_distances_get()` may also refresh distances-related structures.

Once this refresh has been performed, multiple `hwloc_distances_get()` may then be performed concurrently by multiple threads.

Consulting memory attributes Functions consulting memory attributes in hwloc/memattrs.h are thread-safe except if the topology was recently modified (because memory attributes may involve objects that were removed).

Whenever the topology is modified (see above), `hwloc_topology_refresh()` should be called in the same thread-safe context to force the refresh of internal memory attribute structures. A call to

`hwloc_memattr_get_value()` or `hwloc_memattr_get_targets()` may also refresh internal structures for a given memory attribute.

Once this refresh has been performed, multiple functions consulting memory attributes may then be performed concurrently by multiple threads.

Locating topologies `hwloc_topology_set_*` (see Topology Detection Configuration and Query) do not modify the topology directly, but they do modify internal structures describing the behavior of the upcoming invocation of `hwloc_topology_load()`. Hence, all of these functions should not be used concurrently.

Chapter 17

Components and plugins

hwloc is organized in **components** that are responsible for discovering objects. Depending on the topology configuration, some components will be used (once enabled, they create a **backend**), some will be ignored.
The usual default is to enable the native operating system component, (e.g. `linux` or `solaris`) and the `pci` one. If available, an architecture-specific component (such as `x86`) may also improve the topology detection. Finally, some hardware-specific components (such as `cuda` or `rsmi`) may add information about GPUs, accelerators, etc. If a XML topology is loaded, the `xml` discovery component will be used instead of all other components.

17.1 Components enabled by default

The hwloc core contains a list of components sorted by priority. Each one is enabled as long as it does not conflict with the previously enabled ones. This includes native operating system components, architecture-specific ones, and if available, I/O components such as `pci`.
Usually the native operating system component (when it exists, e.g. `linux` or `aix`) is enabled first. Then hwloc looks for an architecture specific component (e.g. `x86`). Finally there also exist a basic component (`no_os`) that just tries to discover the number of PUs in the system.
Each component discovers as much topology information as possible. Most of them, including most native OS components, do nothing unless the topology is still empty. Some others, such as `x86` and `pci`, can complete and annotate what other backends found earlier. Discovery is performed by phases: CPUs are first discovered, then memory is attached, then PCI, etc.
Default priorities ensure that clever components are invoked first. Native operating system components have higher priorities, and are therefore invoked first, because they likely offer very detailed topology information. If needed, it will be later extended by architecture-specific information (e.g. from the `x86` component).
If any configuration function such as hwloc_topology_set_xml() is used before loading the topology, the corresponding component is enabled first. Then, as usual, hwloc enables any other component (based on priorities) that does not conflict.
Certain components that manage a virtual topology, for instance XML topology import or synthetic topology description, conflict with all other components. Therefore, they may only be loaded (e.g. with `hwloc_topology_set_xml()`) if no other component is enabled.
The environment variable `HWLOC_COMPONENTS_VERBOSE` may be set to get verbose messages about available components (including their priority) and enabling as backends.

17.2 Selecting which components to use

If no topology configuration functions such as `hwloc_topology_set_synthetic()` have been called, components may be selected with environment variables such as `HWLOC_XMLFILE`, `HWLOC_SYNTHETIC`, `HWLOC_FSROOT`, or `HWLOC_CPUID_PATH` (see Environment Variables).
Finally, the environment variable `HWLOC_COMPONENTS` resets the list of selected components. If the variable is set and empty (or set to a single comma separating nothing, since some operating systems do not accept empty variables), the normal component priority order is used.
If the variable is set to `x86` in this variable will cause the `x86` component to take precedence over any other component, including the native operating system component. It is therefore loaded first, before hwloc tries to load all remaining non-conflicting components. In this case, `x86` would take care of discovering everything it supports,

instead of only completing what the native OS information. This may be useful if the native component is buggy on some platforms.
It is possible to prevent some components from being loaded by prefixing their name with - in the list. For instance `x86,-pci` will load the `x86` component, then let hwloc load all the usual components except `pci`. A single component phase may also be blacklisted, for instance with `-linux:io`.
It is possible to prevent all remaining components from being loaded by placing `stop` in the environment variable. Only the components listed before this keyword will be enabled.
hwloc_topology_set_components() may also be used inside the program to prevent the loading of a specific component (or phases) for the target topology.

17.3 Loading components from plugins

Components may optionally be built as **plugins** so that the hwloc core library does not directly depend on their dependencies (for instance the `libpciaccess` library). Plugin support may be enabled with the `--enable-plugins` configure option. All components buildable as plugins will then be built as plugins. The configure option may be given a comma-separated list of component names to specify the exact list of components to build as plugins.
Plugins are built as independent dynamic libraries that are installed in `$libdir/hwloc`. All plugins found in this directory are loaded during `topology_init()` (unless blacklisted in `HWLOC_PLUGINS_BLACKLIST`, see Environment Variables). A specific list of directories (colon-separated) to scan may be specified in the `HWLOC_PLUGINS_PATH` environment variable.
Note that loading a plugin just means that the corresponding component is registered to the hwloc core. Components are then only enabled (as a **backend**) if the topology configuration requests it, as explained in the previous sections.
Also note that plugins should carefully be enabled and used when embedding hwloc in another project, see Embedding hwloc in Other Software for details.

17.4 Existing components and plugins

All components distributed within hwloc are listed below. The list of actually available components may be listed at running with the `HWLOC_COMPONENTS_VERBOSE` environment variable (see Environment Variables).

linux The official component for discovering CPU, memory and I/O devices on Linux. It discovers PCI devices without the help of external libraries such as libpciaccess, but requires the pci component for adding vendor/device names to PCI objects. It also discovers many kinds of Linux-specific OS devices.

aix, darwin, freebsd, hpux, netbsd, solaris, windows Each officially supported operating system has its own native component, which is statically built when supported, and which is used by default.

x86 The x86 architecture (either 32 or 64 bits) has its own component that may complete or replace the previously-found CPU information. It is statically built when supported.

no_os A basic component that just tries to detect the number of processing units in the system. It mostly serves on operating systems that are not natively supported. It is always statically built.

pci PCI object discovery uses the external libpciaccess library; see I/O Devices. It may also annotate existing PCI devices with vendor and device names. **It may be built as a plugin**.

opencl The OpenCL component creates co-processor OS device objects such as *opencl0d0* (first device of the first OpenCL platform) or *opencl1d3* (fourth device of the second platform). Only the AMD and NVIDIA OpenCL implementations currently offer locality information. **It may be built as a plugin**.

rsmi This component creates GPU OS device objects such as *rsmi0* for describing AMD GPUs. **It may be built as a plugin**.

levelzero This component creates co-processor OS device objects such as *ze0* for describing oneAPI Level Zero devices. It may also create sub-OS-devices such as *ze0.0* inside those devices. **It may be built as a plugin**.

cuda This component creates co-processor OS device objects such as *cuda0* that correspond to NVIDIA GPUs used with CUDA library. **It may be built as a plugin**.

nvml Probing the NVIDIA Management Library creates OS device objects such as *nvml0* that are useful for batch schedulers. It also detects the actual PCIe link bandwidth without depending on power management state and without requiring administrator privileges. **It may be built as a plugin**.

gl Probing the NV-CONTROL X extension (NVCtrl library) creates OS device objects such as *:0.0* corresponding to NVIDIA displays. They are useful for graphical applications that need to place computation and/or data near a rendering GPU. **It may be built as a plugin**.

synthetic Synthetic topology support (see Synthetic topologies) is always built statically.

xml XML topology import (see Importing and exporting topologies from/to XML files) is always built statically. It internally uses a specific class of components for the actual XML import/export routines (see libxml2 and minimalistic XML backends for details).

- **xml_nolibxml** is a basic and hwloc-specific XML import/export. It is always statically built.
- **xml_libxml** relies on the external libxml2 library for provinding a feature-complete XML import/export. **It may be built as a plugin**.

fake A dummy plugin that does nothing but is used for debugging plugin support.

Chapter 18

Embedding hwloc in Other Software

It can be desirable to include hwloc in a larger software package (be sure to check out the LICENSE file) so that users don't have to separately download and install it before installing your software. This can be advantageous to ensure that your software uses a known-tested/good version of hwloc, or for use on systems that do not have hwloc pre-installed.
When used in "embedded" mode, hwloc will:

- not install any header files
- not build any documentation files
- not build or install any executables or tests
- not build `libhwloc.*` – instead, it will build `libhwloc_embedded.*`

There are two ways to put hwloc into "embedded" mode. The first is directly from the configure command line:

```
shell$ ./configure --enable-embedded-mode ...
```

The second requires that your software project uses the GNU Autoconf / Automake / Libtool tool chain to build your software. If you do this, you can directly integrate hwloc's m4 configure macro into your configure script. You can then invoke hwloc's configuration tests and build setup by calling a m4 macro (see below).
Although hwloc dynamic shared object plugins may be used in embedded mode, the embedder project will have to manually setup dlopen or libltdl in its build system so that hwloc can load its plugins at run time. Also, embedders should be aware of complications that can arise due to public and private linker namespaces (e.g., if the embedder project is loaded into a private namespace and then hwloc tries to dynamically load its plugins, such loading may fail since the hwloc plugins can't find the hwloc symbols they need). The embedder project is **strongly** advised not to use hwloc's dynamically loading plugins / dlopen / libltdl capability.

18.1 Using hwloc's M4 Embedding Capabilities

Every project is different, and there are many different ways of integrating hwloc into yours. What follows is *one* example of how to do it.
If your project uses recent versions Autoconf, Automake, and Libtool to build, you can use hwloc's embedded m4 capabilities. We have tested the embedded m4 with projects that use Autoconf 2.65, Automake 1.11.1, and Libtool 2.2.6b. Slightly earlier versions of may also work but are untested. Autoconf versions prior to 2.65 are almost certain to not work.
You can either copy all the config/hwloc∗m4 files from the hwloc source tree to the directory where your project's m4 files reside, or you can tell aclocal to find more m4 files in the embedded hwloc's "config" subdirectory (e.g., add "-Ipath/to/embedded/hwloc/config" to your Makefile.am's ACLOCAL_AMFLAGS).
The following macros can then be used from your configure script (only HWLOC_SETUP_CORE *must* be invoked if using the m4 macros):

- HWLOC_SETUP_CORE(config-dir-prefix, action-upon-success, action-upon-failure, print_banner_or_not)↩ : Invoke the hwloc configuration tests and setup the hwloc tree to build. The first argument is the prefix to use for AC_OUTPUT files – it's where the hwloc tree is located relative to `$top_srcdir`. Hence, if your

embedded hwloc is located in the source tree at contrib/hwloc, you should pass `[contrib/hwloc]` as the first argument. If HWLOC_SETUP_CORE and the rest of `configure` completes successfully, then "make" traversals of the hwloc tree with standard Automake targets (all, clean, install, etc.) should behave as expected. For example, it is safe to list the hwloc directory in the SUBDIRS of a higher-level Makefile.am. The last argument, if not empty, will cause the macro to display an announcement banner that it is starting the hwloc core configuration tests.

HWLOC_SETUP_CORE will set the following environment variables and AC_SUBST them: HWLOC_EM↩ BEDDED_CFLAGS, HWLOC_EMBEDDED_CPPFLAGS, and HWLOC_EMBEDDED_LIBS. These flags are filled with the values discovered in the hwloc-specific m4 tests, and can be used in your build process as relevant. The _CFLAGS, _CPPFLAGS, and _LIBS variables are necessary to build libhwloc (or libhwloc_↩ embedded) itself.

HWLOC_SETUP_CORE also sets HWLOC_EMBEDDED_LDADD environment variable (and AC_SUBSTs it) to contain the location of the libhwloc_embedded.la convenience Libtool archive. It can be used in your build process to link an application or other library against the embedded hwloc library.

NOTE: If the HWLOC_SET_SYMBOL_PREFIX macro is used, it must be invoked *before* HWLOC_SE↩ TUP_CORE.

- HWLOC_BUILD_STANDALONE: HWLOC_SETUP_CORE defaults to building hwloc in an "embedded" mode (described above). If HWLOC_BUILD_STANDALONE is invoked ∗before∗ HWLOC_SETUP_CO↩ RE, the embedded definitions will not apply (e.g., libhwloc.la will be built, not libhwloc_embedded.la).
- HWLOC_SET_SYMBOL_PREFIX(foo_): Tells the hwloc to prefix all of hwloc's types and public symbols with "foo_"; meaning that function hwloc_init() becomes foo_hwloc_init(). Enum values are prefixed with an upper-case translation if the prefix supplied; HWLOC_OBJ_CORE becomes FOO_HWLOC_OBJ_CORE. This is recommended behavior if you are including hwloc in middleware – it is possible that your software will be combined with other software that links to another copy of hwloc. If both uses of hwloc utilize different symbol prefixes, there will be no type/symbol clashes, and everything will compile, link, and run successfully. If you both embed hwloc without changing the symbol prefix and also link against an external hwloc, you may get multiple symbol definitions when linking your final library or application.
- HWLOC_SETUP_DOCS, HWLOC_SETUP_UTILS, HWLOC_SETUP_TESTS: These three macros only apply when hwloc is built in "standalone" mode (i.e., they should NOT be invoked unless HWLOC_BUILD_S↩ TANDALONE has already been invoked).
- HWLOC_DO_AM_CONDITIONALS: If you embed hwloc in a larger project and build it conditionally with Automake (e.g., if HWLOC_SETUP_CORE is invoked conditionally), you must unconditionally invoke HWL↩ OC_DO_AM_CONDITIONALS to avoid warnings from Automake (for the cases where hwloc is not selected to be built). This macro is necessary because hwloc uses some AM_CONDITIONALs to build itself, and AM_CONDITIONALs cannot be defined conditionally. Note that it is safe (but unnecessary) to call HWLO↩ C_DO_AM_CONDITIONALS even if HWLOC_SETUP_CORE is invoked unconditionally. If you are not using Automake to build hwloc, this macro is unnecessary (and will actually cause errors because it invoked AM_∗ macros that will be undefined).

NOTE: When using the HWLOC_SETUP_CORE m4 macro, it may be necessary to explicitly invoke AC_CANO↩ NICAL_TARGET (which requires config.sub and config.guess) and/or AC_USE_SYSTEM_EXTENSIONS macros early in the configure script (e.g., after AC_INIT but before AM_INIT_AUTOMAKE). See the Autoconf documentation for further information.
Also note that hwloc's top-level configure.ac script uses exactly the macros described above to build hwloc in a standalone mode (by default). You may want to examine it for one example of how these macros are used.

18.2 Example Embedding hwloc

Here's an example of integrating with a larger project named sandbox that already uses Autoconf, Automake, and Libtool to build itself:

```
# First, cd into the sandbox project source tree
shell$ cd sandbox
shell$ cp -r /somewhere/else/hwloc-<version> my-embedded-hwloc
shell$ edit Makefile.am
```

```
  1. Add "-Imy-embedded-hwloc/config" to ACLOCAL_AMFLAGS
  2. Add "my-embedded-hwloc" to SUBDIRS
  3. Add "$(HWLOC_EMBEDDED_LDADD)" and "$(HWLOC_EMBEDDED_LIBS)" to
     sandbox's executable's LDADD line.  The former is the name of the
     Libtool convenience library that hwloc will generate.  The latter
     is any dependent support libraries that may be needed by
     $(HWLOC_EMBEDDED_LDADD).
  4. Add "$(HWLOC_EMBEDDED_CFLAGS)" to AM_CFLAGS
  5. Add "$(HWLOC_EMBEDDED_CPPFLAGS)" to AM_CPPFLAGS
shell$ edit configure.ac
  1. Add "HWLOC_SET_SYMBOL_PREFIX(sandbox_hwloc_)" line
  2. Add "HWLOC_SETUP_CORE([my-embedded-hwloc], [happy=yes], [happy=no])" line
  3. Add error checking for happy=no case
shell$ edit sandbox.c
  1. Add #include <hwloc.h>
  2. Add calls to sandbox_hwloc_init() and other hwloc API functions
```

Now you can bootstrap, configure, build, and run the sandbox as normal – all calls to "sandbox_hwloc_∗" will use the embedded hwloc rather than any system-provided copy of hwloc.

Chapter 19

Frequently Asked Questions (FAQ)

19.1 Concepts

19.1.1 I only need binding, or the number of cores, why should I use hwloc ?

hwloc is its portable API that works on a variety of operating systems. It supports binding of threads, processes and memory buffers (see CPU binding and Memory binding). Even if some features are not supported on some systems, using hwloc is much easier than reimplementing your own portability layer.
Moreover, hwloc provides knowledge of cores and hardware threads. It offers easy ways to bind tasks to individual hardware threads, or to entire multithreaded cores, etc. See How may I ignore symmetric multithreading, hyper-threading, etc. in hwlo
Most alternative software for binding do not even know whether each core is single-threaded, multithreaded or hyper-threaded. They would bind to individual threads without any way to know whether multiple tasks are in the same physical core.
However, using hwloc comes with an overhead since a topology must be loaded before gathering information and binding tasks or memory. Fortunately this overhead may be significantly reduced by filtering non-interesting information out of the topology, see What may I disable to make hwloc faster? below.

19.1.2 What may I disable to make hwloc faster?

Building a hwloc topology on a large machine may be slow because the discovery of hundreds of hardware cores or threads takes time (especially when reading thousands of sysfs files on Linux). Ignoring some objects (for instance caches) that aren't useful to the current application may improve this overhead. One should also consider using XML (see I do not want hwloc to rediscover my enormous machine topology every time I rerun a process) to work around such issues.
Contrary to lstopo which enables most features (see Why is lstopo slow?), the default hwloc configuration is to keep all objects enabled except I/Os and instruction caches. This usually builds a very precise view of the CPU and memory subsystems, which may be reduced if some information is unneeded.

The following code tells hwloc to build a much smaller topology that only contains Cores (explicitly filtered-in below), hardware threads (PUs, cannot be filtered-out), NUMA nodes (cannot be filtered-out), and the root object (usually a Machine; the root cannot be removed without breaking the tree):

```
hwloc_topology_t topology;
hwloc_topology_init(&topology);
/* filter everything out */
hwloc_topology_set_all_types_filter(topology, HWLOC_TYPE_FILTER_KEEP_NONE);
/* filter Cores back in */
hwloc_topology_set_type_filter(topology, HWLOC_OBJ_CORE, HWLOC_TYPE_FILTER_KEEP_ALL);
hwloc_topology_load(topology);
```

However, one should remember that filtering such objects out removes locality information from the hwloc tree. For instance, we may not know anymore which PU is close to which NUMA node. This would be useful to applications that explicitly want to place specific memory buffers close to specific tasks. To ignore useless objects but keep those that bring locality/hierarchy information, applications may replace HWLOC_TYPE_FILTER_KEEP_NONE with HWLOC_TYPE_FILTER_KEEP_STRUCTURE above.

Starting with hwloc 2.8, it is also possible to ignore distances between objects, memory performance attributes, and kinds of CPU cores, by setting topology flags before load:

```
[...]
/* disable distances, memory attributes and CPU kinds */
hwloc_topology_set_flags(topology, HWLOC_TOPOLOGY_FLAG_NO_DISTANCES
                                   |HWLOC_TOPOLOGY_FLAG_NO_MEMATTRS
                                   |HWLOC_TOPOLOGY_FLAG_NO_CPUKINDS);
[...]
hwloc_topology_load(topology);
```

Finally it is possible to prevent some hwloc components from being loaded and queried. If you are sure that the Linux (or x86) component is enough to discover everything you need, you may ask hwloc to disable all other components by setting something like `HWLOC_COMPONENTS=linux,stop` in the environment. See Components and plugins for details.

19.1.3 Should I use logical or physical/OS indexes? and how?

One of the original reasons why hwloc was created is that **physical/OS indexes** (`obj->os_index`) are often crazy and unpredictable: processors numbers are usually non-contiguous (processors 0 and 1 are not physically close), they vary from one machine to another, and may even change after a BIOS or system update. These numbers make task placement hardly portable. Moreover some objects have no physical/OS numbers (caches), and some objects have non-unique numbers (core numbers are only unique within a socket). Physical/OS indexes are only guaranteed to exist and be unique for PU and NUMA nodes.
hwloc therefore introduces **logical indexes** (`obj->logical_index`) which are portable, contiguous and logically ordered (based on the resource organization in the locality tree). In general, one should only use logical indexes and just let hwloc do the internal conversion when really needed (when talking to the OS and hardware).
hwloc developers recommends that users do not use physical/OS indexes unless they really know what they are doing. The main reason for still using physical/OS indexes is when interacting with non-hwloc tools such as numactl or taskset, or when reading hardware information from raw sources such as /proc/cpuinfo.
lstopo options `-l` and `-p` may be used to switch between logical indexes (prefixed with `L#`) and physical/OS indexes (`P#`). Converting one into the other may also be achieved with hwloc-calc which may manipulate either logical or physical indexes as input or output. See also hwloc-calc.

```
# Convert PU with physical number 3 into logical number
$ hwloc-calc -I pu --physical-input --logical-output pu:3
5

# Convert a set of NUMA nodes from logical to physical
# (beware that the output order may not match the input order)
$ hwloc-calc -I numa --logical-input --physical-output numa:2-3 numa:7
0,2,5
```

19.1.4 hwloc is only a structural model, it ignores performance models, memory bandwidth, etc.?

hwloc is indeed designed to provide applications with a structural model of the platform. This is an orthogonal approach to describing the machine with performance models, for instance using memory bandwidth or latencies measured by benchmarks. We believe that both approaches are important for helping application make the most of the hardware.
For instance, on a dual-processor host with four cores each, hwloc clearly shows which four cores are together. Latencies between all pairs of cores of the same processor are likely identical, and also likely lower than the latency between cores of different processors. However, the structural model cannot guarantee such implementation details. On the other side, performance models would reveal such details without always clearly identifying which cores are in the same processor.
The focus of hwloc is mainly of the structural modeling side. However, hwloc lets user adds performance information to the topology through distances (see Distances), memory attributes (see Memory Attributes) or even custom annotations (see How do I annotate the topology with private notes?). hwloc may also use such distance information for grouping objects together (see hwloc only has a one-dimensional view of the architecture, it ignores distances? and What are these Group objects in my topology?).

19.1.5 hwloc only has a one-dimensional view of the architecture, it ignores distances?

hwloc places all objects in a tree. Each level is a one-dimensional view of a set of similar objects. All children of the same object (siblings) are assumed to be equally interconnected (same distance between any of them), while the distance between children of different objects (cousins) is supposed to be larger.
Modern machines exhibit complex hardware interconnects, so this tree may miss some information about the actual physical distances between objects. The hwloc topology may therefore be annotated with distance information that may be used to build a more realistic representation (multi-dimensional) of each level. For instance, there can be a distance matrix that representing the latencies between any pair of NUMA nodes if the BIOS and/or operating system reports them.
For more information about the hwloc distances, see Distances.

19.1.6 What are these Group objects in my topology?

hwloc comes with a set of predefined object types (Core, Package, NUMA node, Caches) that match the vast majority of hardware platforms. The HWLOC_OBJ_GROUP type was designed for cases where this set is not sufficient. Groups may be used anywhere to add more structure information to the topology, for instance to show that 2 out of 4 NUMA nodes are actually closer than the others. When applicable, the `subtype` field describes why a Group was actually added (see also Normal attributes).
hwloc currently uses Groups for the following reasons:

- NUMA parents when memory locality does not match any existing object.
- I/O parents when I/O locality does not match any existing object.
- Distance-based groups made of close objects.
- AMD Core Complex (CCX) (`subtype` is `Complex`, in the x86 backend), but these objects are usually merged with the L3 caches or Dies.
- AMD Bulldozer dual-core compute units (`subtype` is `ComputeUnit`, in the x86 backend), but these objects are usually merged with the L2 caches.
- Intel Extended Topology Enumeration levels (in the x86 backend).
- Windows processor groups when HWLOC_WINDOWS_PROCESSOR_GROUP_OBJS=1 is set in the environment (except if they contain exactly a single NUMA node, or a single Package, etc.).
- IBM S/390 "Books" on Linux (`subtype` is `Book`).
- Linux Clusters of CPUs (`subtype` is `Cluster`), for instance for ARM cores sharing of some internal cache or bus, or x86 cores sharing a L2 cache (since Linux kernel 5.16). `HWLOC_DONT_MERGE_CLUSTER_GROUPS=1` may be set in the environment to disable the automerging of these groups with identical caches, etc.
- AIX unknown hierarchy levels.

hwloc Groups are only kept if no other object has the same locality information. It means that a Group containing a single child is merged into that child. And a Group is merged into its parent if it is its only child. For instance a Windows processor group containing a single NUMA node would be merged with that NUMA node since it already contains the relevant hierarchy information.
When inserting a custom Group with hwloc_hwloc_topology_insert_group_object(), this merging may be disabled by setting its `dont_merge` attribute.

19.1.7 What happens if my topology is asymmetric?

hwloc supports asymmetric topologies even if most platforms are usually symmetric. For example, there could be different types of processors in a single machine, each with different numbers of cores, symmetric multithreading, or levels of caches.
In practice, asymmetric topologies are rare but occur for at least two reasons:

- Intermediate groups may added for I/O affinity: on a 4-package machine, an I/O bus may be connected to 2 packages. These packages are below an additional Group object, while the other packages are not (see also What are these Group objects in my topology?).

- If only part of a node is available to the current process, for instance because the resource manager uses Linux Cgroups to restrict process resources, some cores (or NUMA nodes) will disappear from the topology (unless flag HWLOC_TOPOLOGY_FLAG_INCLUDE_DISALLOWED was passed). On a 32-core machine where 12 cores were allocated to the process, this may lead to one CPU package with 8 cores, another one with only 4 cores, and two missing packages.

To understand how hwloc manages such cases, one should first remember the meaning of levels and cousin objects. All objects of the same type are gathered as horizontal levels with a given depth. They are also connected through the cousin pointers of the hwloc_obj structure. Object attribute (cache depth and type, group depth) are also taken in account when gathering objects as horizontal levels. To be clear: there will be one level for L1i caches, another level for L1d caches, another one for L2, etc.
If the topology is asymmetric (e.g., if a group is missing above some processors), a given horizontal level will still exist if there exist any objects of that type. However, some branches of the overall tree may not have an object located in that horizontal level. Note that this specific hole within one horizontal level does not imply anything for other levels. All objects of the same type are gathered in horizontal levels even if their parents or children have different depths and types.
See the diagram in Terms and Definitions for a graphical representation of such topologies.
Moreover, it is important to understand that a same parent object may have children of different types (and therefore, different depths). **These children are therefore siblings (because they have the same parent), but they are *not* cousins (because they do not belong to the same horizontal level).**

19.1.8 What happens to my topology if I disable symmetric multithreading, hyper-threading, etc. in the system?

hwloc creates one PU (processing unit) object per hardware thread. If your machine supports symmetric multithreading, for instance Hyper-Threading, each Core object may contain multiple PU objects:

```
$ lstopo -
...
  Core L#0
    PU L#0 (P#0)
    PU L#1 (P#2)
  Core L#1
    PU L#2 (P#1)
    PU L#3 (P#3)
```

x86 machines usually offer the ability to disable hyper-threading in the BIOS. Or it can be disabled on the Linux kernel command-line at boot time, or later by writing in sysfs virtual files.
If you do so, the hwloc topology structure does not significantly change, but some PU objects will not appear anymore. No level will disappear, you will see the same number of Core objects, but each of them will contain a single PU now. The PU level does not disappear either (remember that hwloc topologies always contain a PU level at the bottom of the topology) even if there is a single PU object per Core parent.

```
$ lstopo -
...
  Core L#0
    PU L#0 (P#0)
  Core L#1
    PU L#1 (P#1)
```

19.1.9 How may I ignore symmetric multithreading, hyper-threading, etc. in hwloc?

First, see What happens to my topology if I disable symmetric multithreading, hyper-threading, etc. in the system? for more information about multithreading.
If you need to ignore symmetric multithreading in software, you should likely manipulate hwloc Core objects directly:

```
/* get the number of cores */
unsigned nbcores = hwloc_get_nbobjs_by_type(topology, HWLOC_OBJ_CORE);
...
/* get the third core below the first package */
hwloc_obj_t package, core;
package = hwloc_get_obj_by_type(topology, HWLOC_OBJ_PACKAGE, 0);
core = hwloc_get_obj_inside_cpuset_by_type(topology, package->cpuset,
                                           HWLOC_OBJ_CORE, 2);
```

Whenever you want to bind a process or thread to a core, make sure you singlify its cpuset first, so that the task is actually bound to a single thread within this core (to avoid useless migrations).

```
/* bind on the second core */
hwloc_obj_t core = hwloc_get_obj_by_type(topology, HWLOC_OBJ_CORE, 1);
hwloc_cpuset_t set = hwloc_bitmap_dup(core->cpuset);
hwloc_bitmap_singlify(set);
hwloc_set_cpubind(topology, set, 0);
hwloc_bitmap_free(set);
```

With hwloc-calc or hwloc-bind command-line tools, you may specify that you only want a single-thread within each core by asking for their first PU object:

```
$ hwloc-calc core:4-7
0x0000ff00
$ hwloc-calc core:4-7.pu:0
0x00005500
```

When binding a process on the command-line, you may either specify the exact thread that you want to use, or ask hwloc-bind to singlify the cpuset before binding

```
$ hwloc-bind core:3.pu:0 -- echo "hello from first thread on core #3"
hello from first thread on core #3
...
$ hwloc-bind core:3 --single -- echo "hello from a single thread on core #3"
hello from a single thread on core #3
```

19.2 Advanced

19.2.1 I do not want hwloc to rediscover my enormous machine topology every time I rerun a process

Although the topology discovery is not expensive on common machines, its overhead may become significant when multiple processes repeat the discovery on large machines (for instance when starting one process per core in a parallel application). The machine topology usually does not vary much, except if some cores are stopped/restarted or if the administrator restrictions are modified. Thus rediscovering the whole topology again and again may look useless.
For this purpose, hwloc offers XML import/export and shared memory features.
XML lets you save the discovered topology to a file (for instance with the lstopo program) and reload it later by setting the HWLOC_XMLFILE environment variable. The HWLOC_THISSYSTEM environment variable should also be set to 1 to assert that loaded file is really the underlying system.
Loading a XML topology is usually much faster than querying multiple files or calling multiple functions of the operating system. It is also possible to manipulate such XML files with the C programming interface, and the import/export may also be directed to memory buffer (that may for instance be transmitted between applications through a package). See also Importing and exporting topologies from/to XML files.

Note

> The environment variable HWLOC_THISSYSTEM_ALLOWED_RESOURCES may be used to load a XML topology that contains the entire machine and restrict it to the part that is actually available to the current process (e.g. when Linux Cgroup/Cpuset are used to restrict the set of resources). See Environment Variables.

Shared-memory topologies consist in one process exposing its topology in a shared-memory buffer so that other processes (running on the same machine) may use it directly. This has the advantage of reducing the memory footprint since a single topology is stored in physical memory for multiple processes. However, it requires all processes to map this shared-memory buffer at the same virtual address, which may be difficult in some cases. This API is described in Sharing topologies between processes.

19.2.2 How many topologies may I use in my program?

hwloc lets you manipulate multiple topologies at the same time. However, these topologies consume memory and system resources (for instance file descriptors) until they are destroyed. It is therefore discouraged to open the same topology multiple times.
Sharing a single topology between threads is easy (see Thread Safety) since the vast majority of accesses are read-only.
If multiple topologies of different (but similar) nodes are needed in your program, have a look at How to avoid memory waste when man

19.2.3 How to avoid memory waste when manipulating multiple similar topologies?

hwloc does not share information between topologies. If multiple similar topologies are loaded in memory, for instance the topologies of different identical nodes of a cluster, lots of information will be duplicated.
hwloc/diff.h (see also Topology differences) offers the ability to compute topology differences, apply or unapply them, or export/import to/from XML. However, this feature is limited to basic differences such as attribute changes. It does not support complex modifications such as adding or removing some objects.

19.2.4 How do I annotate the topology with private notes?

Each hwloc object contains a `userdata` field that may be used by applications to store private pointers. This field is only valid during the lifetime of these container object and topology. It becomes invalid as soon the topology is destroyed, or as soon as the object disappears, for instance when restricting the topology. The userdata field is not exported/imported to/from XML by default since hwloc does not know what it contains. This behavior may be changed by specifying application-specific callbacks with `hwloc_topology_set_userdata_export_callback()` and `hwloc_topology_set_userdata_import_callb`
Each object may also contain some *info* attributes (name and value strings) that are setup by hwloc during discovery and that may be extended by the user with `hwloc_obj_add_info()` or `hwloc_modify_infos()` (see also Object attributes). Contrary to the `userdata` field which is unique, multiple info attributes may exist for each object, even with the same name. These attributes are always exported to XML. However, only character strings may be used as names and values.
It is also possible to insert Misc objects with a custom name anywhere as a leaf of the topology (see Miscellaneous objects). And Misc objects may have their own userdata and info attributes just like any other object.
The hwloc-annotate command-line tool may be used for adding Misc objects and info attributes.
There is also a topology-specific userdata pointer that can be used to recognize different topologies by storing a custom pointer. It may be manipulated with `hwloc_topology_set_userdata()` and `hwloc_topology_get_userdata()`.

19.2.5 How do I create a custom heterogeneous and asymmetric topology?

Synthetic topologies (see Synthetic topologies) allow to create custom topologies but they are always symmetric: same numbers of cores in each package, same local NUMA nodes, same shared cache, etc. To create an asymmetric topology, for instance to simulate hybrid CPUs, one may want to start from a larger symmetric topology and restrict it.

Assuming we want two packages, one with 4 dual-threaded cores, and one with 8 single-threaded cores, first we create a topology with two identical packages, each with 8 dual-threaded cores:

```
$ lstopo -i "pack:2 core:8 pu:2" topo.xml
```

Then create the bitmask representing the PUs that we wish to keep and pass it to lstopo's restrict option:

```
$ hwloc-calc -i topo.xml pack:0.core:0-3.pu:0-1 pack:1.core:0-7.pu:0
0x555500ff
$ lstopo -i topo.xml --restrict 0x555500ff topo2.xml
$ mv -f topo2.xml topo.xml
```

To mark the cores of first package as Big (power hungry) and those of second package as Little (energy efficient), define CPU kinds:

```
$ hwloc-annotate topo.xml topo.xml -- none -- cpukind $(hwloc-calc -i topo.xml pack:0) 1 0 CoreType Big
$ hwloc-annotate topo.xml topo.xml -- none -- cpukind $(hwloc-calc -i topo.xml pack:1) 0 0 CoreType Little
```

A similar method may be used for heterogeneous memory. First we specify 2 NUMA nodes per package in our synthetic description:

```
$ lstopo -i "pack:2 [numa(memory=100GB)] [numa(memory=10GB)] core:8 pu:2" topo.xml
```

Then remove the second node of first package:

```
$ hwloc-calc -i topo.xml --nodeset node:all ~pack:0.node:1
0x0000000e
$ lstopo -i topo.xml --restrict nodeset=0xe topo2.xml
$ mv -f topo2.xml topo.xml
```

Then make one large node even bigger:

```
$ hwloc-annotate topo.xml topo.xml -- pack:0.numa:0 -- size 200GB
```

Now we have 200GB in first package, and 100GB+10GB in second package.

Next we may specify that the small NUMA node (second of second package) is HBM while the large ones are DRAM:

```
$ hwloc-annotate topo.xml topo.xml -- pack:0.numa:0 pack:1.numa:0 -- subtype DRAM
$ hwloc-annotate topo.xml topo.xml -- pack:1.numa:1 -- subtype HBM
```

Finally we may define memory performance attributes to specify that the HBM bandwidth (200GB/s) from local cores is higher than the DRAM bandwidth (50GB/s):

```
$ hwloc-annotate topo.xml topo.xml -- pack:0.numa:0 -- memattr Bandwidth pack:0 50000
$ hwloc-annotate topo.xml topo.xml -- pack:1.numa:0 -- memattr Bandwidth pack:1 50000
$ hwloc-annotate topo.xml topo.xml -- pack:1.numa:1 -- memattr Bandwidth pack:1 200000
```

There is currently no way to create or modify I/O devices attached to such fake topologies. There is also no way to have some *partial levels*, e.g. a L3 cache in one package but not in the other.

More changes may obviously be performed by manually modifying the XML export file. Simple operations such as modifying object attributes (cache size, memory size, name-value info attributes, etc.), moving I/O subtrees, moving Misc objects, or removing objects are easy to perform.
However, modifying CPU and Memory objects requires care since cpusets and nodesets are supposed to remain consistent between parents and children. Similarly, PCI bus IDs should remain consistent between bridges and children within an I/O subtree.

19.3 Caveats

19.3.1 Why is lstopo slow?

lstopo enables most hwloc objects and discovery flags by default so that the output topology is as precise as possible (while hwloc disables many of them by default). This includes I/O device discovery through PCI libraries as well as external libraries such as NVML. To speed up lstopo, you may disable such features with command-line options such as `--no-io`.
When NVIDIA GPU probing is enabled (e.g. with CUDA or NVML), one may enable the *Persistent* mode (with `nvidia-smi -pm 1`) to avoid significant GPU wakeup and initialization overhead.
When AMD GPU discovery is enabled with OpenCL and hwloc is used remotely over ssh, some spurious round-trips on the network may significantly increase the discovery time. Forcing the `DISPLAY` environment variable to the remote X server display (usually `:0`) instead of only setting the `COMPUTE` variable may avoid this.
Also remember that these hwloc components may be disabled. At build-time, one may pass configure flags such as `--disable-opencl`, `--disable-cuda`, `--disable-nvml`, `--disable-rsmi`, and `--disable-levelzero`. At runtime, one may set the environment variable `HWLOC_COMPONENTS=-opencl,-cuda,-nvml,-rsmi,-levelzero` or call hwloc_topology_set_components().
Remember that these backends are disabled by default, except in lstopo. If hwloc itself is still too slow even after disabling all the I/O devices as explained above, see also What may I disable to make hwloc faster? for disabling even more features.

19.3.2 Does hwloc require privileged access?

hwloc discovers the topology by querying the operating system. Some minor features may require privileged access to the operation system. For instance memory module discovery on Linux is reserved to root, and the entire PCI discovery on Solaris and BSDs requires access to some special files that are usually restricted to root (/dev/pci∗ or /devices/pci∗).
To workaround this limitation, it is recommended to export the topology as a XML file generated by the administrator (with the lstopo program) and make it available to all users (see Importing and exporting topologies from/to XML files). It will offer all discovery information to any application without requiring any privileged access anymore. Only the necessary hardware characteristics will be exported, no sensitive information will be disclosed through this XML export.

This XML-based model also has the advantage of speeding up the discovery because reading a XML topology is usually much faster than querying the operating system again.
The utility `hwloc-dump-hwdata` is also involved in gathering privileged information at boot time and making it available to non-privileged users (note that this may require a specific SELinux MLS policy module). However, it only applies to Intel Xeon Phi processors for now (see Why do I need hwloc-dump-hwdata for memory on Intel Xeon Phi processor?).
See also `HWLOC_DUMPED_HWDATA_DIR` in Environment Variables for details about the location of dumped files.

19.3.3 What should I do when hwloc reports "operating system" warnings?

When the operating system reports invalid locality information (because of either software or hardware bugs), hwloc may fail to insert some objects in the topology because they cannot fit in the already built tree of resources. If so, hwloc will report a warning like the following. The object causing this error is ignored, the discovery continues but the resulting topology will miss some objects and may be asymmetric (see also What happens if my topology is asymmetric?).

```
****************************************************************************
* hwloc received invalid information from the operating system.
*
* L3 (cpuset 0x000003f0) intersects with NUMANode (P#0 cpuset 0x0000003f) without inclusion!
* Error occurred in topology.c line 940
*
* Please report this error message to the hwloc user's mailing list,
* along with the files generated by the hwloc-gather-topology script.
*
* hwloc will now ignore this invalid topology information and continue.
****************************************************************************
```

These errors are common on large AMD platforms because of BIOS and/or Linux kernel bugs causing invalid L3 cache information. In the above example, the hardware reports a L3 cache that is shared by 2 cores in the first NUMA node and 4 cores in the second NUMA node. That's wrong, it should actually be shared by all 6 cores in a single NUMA node. The resulting topology will miss some L3 caches.
If your application does not care about cache sharing, or if you do not plan to request cache-aware binding in your process launcher, you may likely ignore this error (and hide it by setting HWLOC_HIDE_ERRORS=1 in your environment).
Some platforms report similar warnings about conflicting Packages and NUMANodes.
On x86 hosts, passing `HWLOC_COMPONENTS=x86` in the environment may workaround some of these issues by switching to a different way to discover the topology.
Upgrading the BIOS and/or the operating system may help. Otherwise, as explained in the message, reporting this issue to the hwloc developers (by sending the tarball that is generated by the hwloc-gather-topology script on this platform) is a good way to make sure that this is a software (operating system) or hardware bug (BIOS, etc).
See also Questions and Bugs. Opening an issue on GitHub automatically displays hints on what information you should provide when reporting such bugs.

19.3.4 Why does Valgrind complain about hwloc memory leaks?

If you are debugging your application with Valgrind, you want to avoid memory leak reports that are caused by hwloc and not by your program.
hwloc itself is often checked with Valgrind to make sure it does not leak memory. However, some global variables in hwloc dependencies are never freed. For instance libz allocates its global state once at startup and never frees it so that it may be reused later. Some libxml2 global state is also never freed because hwloc does not know whether it can safely ask libxml2 to free it (the application may also be using libxml2 outside of hwloc).
These unfreed variables cause leak reports in Valgrind. hwloc installs a Valgrind *suppressions* file to hide them. You should pass the following command-line option to Valgrind to use it:

```
--suppressions=/path/to/hwloc-valgrind.supp
```

19.4 Platform-specific

19.4.1 How do I enable ROCm SMI and select which version to use?

hwloc enables ROCm SMI as soon as it finds its development headers and libraries on the system. This detection consists in looking in `/opt/rocm` by default. If a ROCm version was specified with

`--with-rocm-version=4.4.0` or in the `ROCM_VERSION` environment variable, then `/opt/rocm-<version>` is used instead. Finally, a specific installation path may be specified with `--with-rocm=/path/to/rocm`.
As usual, developer header and library paths may also be set through environment variables such as `LIBRARY_PATH` and `C_INCLUDE_PATH`.
To find out whether ROCm SMI was detected and enabled, look in *Probe / display I/O devices* at the end of the configure script output. Passing `--enable-rsmi` will also cause configure to fail if RSMI could not be found and enabled in hwloc.

19.4.2 How do I enable CUDA and select which CUDA version to use?

hwloc enables CUDA as soon as it finds CUDA development headers and libraries on the system. This detection may be performed thanks to `pkg-config` but it requires hwloc to know which CUDA version to look for. This may be done by passing `--with-cuda-version=11.0` to the configure script. Otherwise hwloc will also look for the `CUDA_VERSION` environment variable.
If `pkg-config` does not work, passing `--with-cuda=/path/to/cuda` to the configure script is another way to define the corresponding library and header paths. Finally, these paths may also be set through environment variables such as `LIBRARY_PATH` and `C_INCLUDE_PATH`.
These paths, either detected by `pkg-config` or given manually, will also be used to detect NVML and OpenCL libraries and enable their hwloc backends.
To find out whether CUDA was detected and enabled, look in *Probe / display I/O devices* at the end of the configure script output. Passing `--enable-cuda` will also cause configure to fail if CUDA could not be found and enabled in hwloc.
Note that `--with-cuda=/nonexisting` may be used to disable all dependencies that are installed by CUDA, i.e. the CUDA, NVML and NVIDIA OpenCL backends, since the given directory does not exist.

19.4.3 How do I find the local MCDRAM NUMA node on Intel Xeon Phi processor?

Intel Xeon Phi processors introduced a new memory architecture by possibly having two distinct local memories: some normal memory (DDR) and some high-bandwidth on-package memory (MCDRAM). Processors can be configured in various clustering modes to have up to 4 *Clusters*. Moreover, each *Cluster* (quarter, half or whole processor) of the processor may have its own local parts of the DDR and of the MCDRAM. This memory and clustering configuration may be probed by looking at MemoryMode and ClusterMode attributes, see Hardware Platform Information and doc/examples/get-knl-modes.c in the source directory.
Starting with version 2.0, hwloc properly exposes this memory configuration. DDR and MCDRAM are attached as two memory children of the same parent, DDR first, and MCDRAM second if any. Depending on the processor configuration, that parent may be a Package, a Cache, or a Group object of type `Cluster`.
Hence cores may have one or two local NUMA nodes, listed by the core nodeset. An application may allocate local memory from a core by using that nodeset. The operating system will actually allocate from the DDR when possible, or fallback to the MCDRAM.
To allocate specifically on one of these memories, one should walk up the parent pointers until finding an object with some memory children. Looking at these memory children will give the DDR first, then the MCDRAM if any. Their nodeset may then be used for allocating or binding memory buffers.
One may also traverse the list of NUMA nodes until finding some whose cpuset matches the target core or PUs. The MCDRAM NUMA nodes may be identified thanks to the `subtype` field which is set to `MCDRAM`.
Command-line tools such as `hwloc-bind` may bind memory on the MCDRAM by using the *hbm* keyword. For instance, to bind on the first MCDRAM NUMA node:

```
$ hwloc-bind --membind --hbm numa:0 -- myprogram
$ hwloc-bind --membind numa:0 -- myprogram
```

19.4.4 Why do I need hwloc-dump-hwdata for memory on Intel Xeon Phi processor?

Intel Xeon Phi processors may use the on-package memory (MCDRAM) as either memory or a memory-side cache (reported as a L3 cache by hwloc by default, see `HWLOC_KNL_MSCACHE_L3` in Environment Variables). There are also several clustering modes that significantly affect the memory organization (see How do I find the local MCDRAM NUMA node for more information about these modes). Details about these are currently only available to privileged users. Without them, hwloc relies on a heuristic for guessing the modes.
The hwloc-dump-hwdata utility may be used to dump this privileged binary information into human-readable and world-accessible files that the hwloc library will later load. The utility should usually run as root once during boot,

in order to update dumped information (stored under /var/run/hwloc by default) in case the MCDRAM or clustering configuration changed between reboots.
When SELinux MLS policy is enabled, a specific hwloc policy module may be required so that all users get access to the dumped files (in /var/run/hwloc by default). One may use hwloc policy files from the SELinux Reference Policy at https://github.com/TresysTechnology/refpolicy-contrib (see also the documentation at https://github.com/TresysTechnology/refpolicy/wiki/GettingStarted).
hwloc-dump-hwdata requires `dmi-sysfs` kernel module loaded.
The utility is currently unneeded on platforms without Intel Xeon Phi processors.
See `HWLOC_DUMPED_HWDATA_DIR` in Environment Variables for details about the location of dumped files.

19.4.5 How do I build hwloc for Windows?

hwloc binary releases for Windows are available on the website download pages (as pre-built ZIPs for both 32bits and 64bits x86 platforms). However hwloc also offers several ways to build on Windows:

- The usual Unix build steps (`configure`, `make` and `make install`) work on the **MSYS2/MinGW** environment on Windows (the official hwloc binary releases are built this way). Some environment variables and options must be configured, see `contrib/ci.inria.fr/job-3-mingw.sh` in the hwloc repository for an example (used for nightly testing).
- hwloc also supports such Unix-like builds in **Cygwin** (environment for porting Unix code to Windows).
- Windows build is also possible with **CMake** (`CMakeLists.txt` available under `contrib/windows-cmake/`).
- hwloc also comes with an example of **Microsoft Visual Studio solution** (under `contrib/windows/`) that may serve as a base for custom builds.

19.4.6 How to get useful topology information on NetBSD?

The NetBSD (and FreeBSD) backend uses x86-specific topology discovery (through the x86 component). This implementation requires CPU binding so as to query topology information from each individual processor. This means that hwloc cannot find any useful topology information unless user-level process binding is allowed by the NetBSD kernel. The `security.models.extensions.user_set_cpu_affinity` sysctl variable must be set to 1 to do so. Otherwise, only the number of processors will be detected.

19.4.7 Why does binding fail on AIX?

The AIX operating system requires specific user capabilities for attaching processes to resource sets (CAP_NU↩MA_ATTACH). Otherwise functions such as hwloc_set_cpubind() fail (return -1 with errno set to EPERM).
This capability must also be inherited (through the additional CAP_PROPAGATE capability) if you plan to bind a process before forking another process, for instance with `hwloc-bind`.
These capabilities may be given by the administrator with:

```
chuser "capabilities=CAP_PROPAGATE,CAP_NUMA_ATTACH" <username>
```

19.5 Compatibility between hwloc versions

19.5.1 How do I handle API changes?

The hwloc interface may be extended in every new major release. Any application using the hwloc API should be prepared to check at compile-time whether some features are available in the currently installed hwloc distribution.

To check for the API of release X.Y.Z at build time, you may compare HWLOC_API_VERSION with `(X<<16)+(Y<<8)+Z`. For instance, to check for at least 3.0:

```
#include <hwloc.h>
#if HWLOC_API_VERSION >= 0x00030000
...
#endif
```

For instance, the cpukinds API is only available starting with hwloc 2.4:

```
#if HWLOC_API_VERSION >= 0x00020400
  int nr = hwloc_cpukinds_get_nr(topology, 0);
  if (nr > 0) {
    ...
  }
#endif
```

Once a program is built against a hwloc library, it may also dynamically link with compatible libraries from other hwloc releases. The version of that runtime library may be queried with hwloc_get_api_version(). For instance, the following code enables the topology flag HWLOC_TOPOLOGY_FLAG_NO_DISTANCES when compiling on hwloc 2.8 or later, but it disables it at runtime if running on an older hwloc (otherwise hwloc_topology_set_flags() would fail).

```
unsigned long topology_flags = ...; /* wanted flags that were supported before 2.8 */
#if HWLOC_API_VERSION >= 0x20800
if (hwloc_get_api_version() >= 0x20800)
  topology_flags |= HWLOC_TOPOLOGY_FLAG_NO_DISTANCES; /* wanted flags only supported in 2.8+ */
#endif
hwloc_topology_set_flags(topology, topology_flags);
```

See also How do I handle ABI breaks? for using hwloc_get_api_version() for testing ABI compatibility.
See also Upgrading to the hwloc 3.0 API for significant API changes between hwloc 2.x and 3.0.

19.5.2 What is the difference between API and library version numbers?

HWLOC_API_VERSION is the version of the API. It changes when functions are added, modified, etc. However it does not necessarily change from one release to another. For instance, two releases of the same series (e.g. 2.0.3 and 2.0.4) usually have the same HWLOC_API_VERSION (`0x00020000`). However their HWLOC_VERSION strings are different (`"2.0.3"` and `"2.0.4"` respectively).

19.5.3 How do I handle ABI breaks?

The hwloc interface was slightly modified in release 3.0 to fix several issues of the 2.x interface (see Upgrading to the hwloc 3.0 API and the NEWS file in the source directory for details). The ABI was broken, which means **applications must be recompiled against the new 3.0 interface**.
To check that you are not mixing old/recent headers with a recent/old runtime library, check the major revision number in the API version:

```
#include <hwloc.h>
  unsigned version = hwloc_get_api_version();
  if ((version >> 16) != (HWLOC_API_VERSION >> 16)) {
    fprintf(stderr,
            "%s compiled for hwloc API 0x%x but running on library API 0x%x.\n"
            "You may need to point LD_LIBRARY_PATH to the right hwloc library.\n"
            "Aborting since the new ABI is not backward compatible.\n",
            callname, HWLOC_API_VERSION, version);
    exit(EXIT_FAILURE);
  }
```

To specifically detect issues between v3.0 and previous releases:

```
#include <hwloc.h>
#if HWLOC_API_VERSION >= 0x00030000
  /* headers are recent */
  if (hwloc_get_api_version() < 0x30000)
    ... error out, the hwloc runtime library is older than 3.0 ...
#else
  /* headers are pre-3.0 */
  if (hwloc_get_api_version() >= 0x30000)
    ... error out, the hwloc runtime library is more recent than 3.0 ...
#endif
```

In theory, library sonames prevent linking with incompatible libraries. However custom hwloc installations or improperly configured build environments may still lead to such issues. Hence running one of the above (cheap) checks before initializing hwloc topology may be useful.

19.5.4 Are XML topology files compatible between hwloc releases?

The general rule is that hwloc XML topology files are forward-compatible up-to the next major release series:

- XML exported by hwloc 3.x may be imported by
  - the same release or a more recent 3.x;
  - older 3.x hopefully (it may break if new XML features are added to future 3.x releases);
  - the next major release 4.x.
- XML exported by hwloc 2.x may be imported by any 2.x or any 3.x;
- XML exported by hwloc 1.x may be imported by any 2.x but **not by any 3.x**.

However, hwloc XMLs are not always backward-compatible. As a convenience feature, hwloc 3.0 XMLs may be imported by hwloc 2.10 but not by any older releases. 2.10 import may fail for future 3.x XMLs if new features are added.

As XMLs may be exchanged at runtime between some components of the software stack (for instance the resource managers and MPI processes), users are advised to use a single hwloc release (or at least a single release per major release series, e.g. 2.10 and 3.0 only). Building all these components on the same (cluster-wide) hwloc installation is a good way to avoid such incompatibilities. For instance, some MPI implementations come with their own custom hwloc builds, but they should be configured to use the public one instead.

To work around XML compatibility issues, the hwloc export may be configured to target older releases, e.g. force hwloc v3.x to export to v2.x format, see XML changes.

19.5.5 Are synthetic strings compatible between hwloc releases?

Synthetic strings (see Synthetic topologies) are forward-compatible: a synthetic string generated by a release may be imported by future hwloc libraries.
However they are often not backward-compatible because new details may have been added to synthetic descriptions in recent releases. Some flags may be given to hwloc_topology_export_synthetic() to avoid such details and stay backward compatible.

19.5.6 Is it possible to share a shared-memory topology between different hwloc releases?

Shared-memory topologies (see Sharing topologies between processes) have strong requirements on compatibility between hwloc libraries. Adopting a shared-memory topology fails if it was exported by a non-compatible hwloc release. Releases with same major revision are usually compatible (e.g. hwloc 2.0.4 may adopt a topology exported by 2.0.3) but different major revisions may be incompatible (e.g. hwloc 2.1.0 cannot adopt from 2.0.x).
Topologies are shared at runtime between some components of the HPC software stack (for instance the resource managers and MPI processes). Building all these components on the same (system-wide) hwloc installation is a good way to avoid such incompatibilities.

Chapter 20

Upgrading to the hwloc 3.0 API

The following subsections contain hints to upgrade code from the hwloc 2.x API to the 3.0 API, or to support both APIs simultaneously. They **do not document how to migrate from hwloc 1.x to 3.0**. It is strongly discouraged to support hwloc APIs from 1.x to 3.0 in the same code. hwloc 2.0 was released more than 6 years ago, its documentation contain a similar page to migrate away from hwloc 1.x API. All users are strong encouraged to stop using hwloc 1.x.
See Compatibility between hwloc versions for detecting the hwloc version that you are compiling and/or running against.

20.1 OS device type is now a bitmask

This change does not ∗imply compile failures but things will very likely break at runtime.

The OS device "type" attribute is now a bitmask instead of a single value, and many existing devices now combine two values.

- "Block" OS devices are now "Storage" (for actual Block devices) and/or "Memory" (for Linux DAX and CXL devices, etc).
- Some "CoProcessors" are also "GPUs" (e.g. CUDA devices), and some GPUs are also CoProcessors (e.g. RSMI).
- "OpenFabrics" devices are now also "Network".
- BXI interfaces are now "Network" instead of "OpenFabrics".

See OS devices for details.

Codes looking OS device types should be updated as follows:

```
#if HWLOC_API_VERSION >= 0x30000
  if (obj->type == HWLOC_OBJ_OS_DEVICE && obj->attr->osdev.type & HWLOC_OSDEV_TYPE_GPU)
    /* obj is a 3.x GPU OS device */
#else
  if (obj->type == HWLOC_OBJ_OS_DEVICE && obj->attr->osdev.type == HWLOC_OSDEV_TYPE_GPU)
    /* obj is a 2.x GPU OS device */
#endif
```

20.2 Finding the level depth from a type and some attributes

hwloc_get_type_depth_with_attr() generalizes hwloc_get_type_depth() by using object attributes to disambiguate multiple levels with same type. hwloc_type_sscanf_as_depth() is deprecated in favor of using hwloc_type_sscanf() followed by hwloc_get_type_depth_with_attr():

```
int my_hwloc_type_sscanf_as_depth(const char *string, hwloc_obj_type_t *typep,
                                  hwloc_topology_t topology, int *depthp)
{
#if HWLOC_API_VERSION >= 0x30000
```

```
  hwloc_obj_type_t type;
  union hwloc_obj_attr_u attr;
  int depth, err;

  err = hwloc_type_sscanf(string, &type, &attr, sizeof(attr));
  if (err < 0)
    return err;
  if (typep)
    *typep = type;
  depth = hwloc_get_type_depth_with_attr(topology, type, &attr, sizeof(attr));
  *depthp = depth;
  return 0;
#else
  return_hwloc_type_sscanf_as_depth(string, typep, topology, depthp);
#endif
}
```

20.3 Info attribute structure

A new structure hwloc_infos_s embeds the pointer and count of struct hwloc_info_s. Former functions such as hwloc_obj_get_info_by_name() still work fine, but any code that manipulates this array and count directly with the 2.x API will fail to build on 3.x.

```
#if HWLOC_API_VERSION >= 0x30000
  for(i=0; i<obj->infos.count; i++)
    printf("%s = %s\n", obj->infos.array[i].name, obj->infos.array[i].value);
#else
  for(i=0; i<obj->infos_count; i++)
    printf("%s = %s\n", obj->infos[i].name, obj->infos[i].value);
#endif
```

Functions hwloc_cpukinds_get_info() and hwloc_cpukinds_register() now manipulate infos as such a structure.

20.4 Root and topology infos

Info attributes may now be stored directly inside the topology. The array of topology infos may be retrieved with hwloc_topology_get_infos().

Several info attributes previously stored in the root object are now topology attributes (e.g. information about hwloc, about the discovery, operating system information returned by uname). See Custom string infos for details.

Additionally, the "Backend" info attribute of OS devices is now in the topology root object together with other backends instead of in each object.

20.5 Distances structure kinds

HWLOC_DISTANCES_KIND_MEANS_LATENCY and HWLOC_DISTANCES_KIND_MEANS_BANDWIDTH are renamed to HWLOC_DISTANCES_KIND_VALUE_LATENCY and HWLOC_DISTANCES_KIND_VALUE_BANDWIDTH.

The XGMIHops distance matrix is now of the new kind HWLOC_DISTANCES_KIND_VALUE_HOPS instead of latency.

20.6 XML changes

hwloc 3.x can load XML topology files exported by hwloc 2.x. hwloc 3.x may also export 2.x-compatible topology files (see below).
Moreover hwloc 2.10 is also able to import 3.0 exports. However this convenient transitional feature may break in the future if new features are added in 3.x. Hence developers should not rely on it and rather assume that hwloc 3.x XMLs are not compatible with hwloc 2.x.

Users are advised to negociate hwloc versions between exporter and importer: If the importer isn't 3.x, the exporter should export to 2.x. Otherwise, things should work by default.
Hence hwloc_topology_export_xml() and hwloc_topology_export_xmlbuffer() have a flags argument to force a hwloc-2.x-compatible XML export.

- If both importer and exporter use hwloc 3.x, do not pass any flag.
- When the importer uses hwloc 2.x, export with HWLOC_TOPOLOGY_EXPORT_XML_FLAG_V2. Otherwise the importer will fail to import.
- When the exporter uses hwloc 2.x, a 3.x importer can import without problem.

Here is an example of code for supporting these three cases:

```
#if HWLOC_API_VERSION >= 0x30000
if (3.x exporter with 2.x importer)
  hwloc_topology_export_xml(...., HWLOC_TOPOLOGY_EXPORT_XML_FLAG_V2);
else /* 3.x exporter with 3.x importer */
  hwloc_topology_export_xml(...., 0);
#else /* 2.x exporter is compatible with both 2.x and 3.x importers */
  hwloc_topology_export_xml(...., 0);
#endif
```

Note that hwloc v3.x can neither import from nor export to hwloc 1.x.

20.7 API Deprecations

- HWLOC_OBJ_OSDEV_BLOCK deprecated in favor of HWLOC_OBJ_OSDEV_STORAGE (or HWLOC_OBJ_OSDEV_MEMOR or both, depending on the device) since hwloc 3.0.
- HWLOC_TOPOLOGY_FLAG_WHOLE_SYSTEM deprecated in favor of HWLOC_TOPOLOGY_FLAG_INCLUDE_DISALLOWE since hwloc 2.1.
- hwloc_type_sscanf_as_depth() deprecated in favor of hwloc_type_sscanf() and hwloc_get_type_depth_with_attr() since hwloc 3.0, see Finding the level depth from a type and some attributes.
- hwloc_distances add() deprecated in favor of hwloc_distances_add_create(), hwloc_distances_add_values() and hwloc_distances_add_commit() since hwloc 2.5.

20.8 API Removals

Functions that were deprecated since 2.0 were removed:

- Memory binding functions with the `_nodeset` prefix, for instance hwloc_set_membind_nodeset(), replaced with using the HWLOC_MEMBIND_BYNODESET flag.
- hwloc_topology_insert_misc_object_by_parent(), replaced with hwloc_topology_insert_misc_object().
- hwloc_obj_cpuset_snprintf() replaced with hwloc_bitmap_snprintf().
- hwloc_obj_type_sscanf() replace with hwloc_type_sscanf().
- hwloc_cpuset_to_nodeset_strict() and hwloc_cpuset_from_nodeset_strict() removed since their non-strict variants are sufficient.

Chapter 21

Module Index

21.1 Modules

Here is a list of all modules:

Error reporting in the API . . . 85
API version . . . 86
Object Sets (hwloc_cpuset_t and hwloc_nodeset_t) . . . 87
Object Types . . . 88
Object Structure and Attributes . . . 93
Topology Creation and Destruction . . . 94
Object levels, depths and types . . . 97
Converting between Object Types and Attributes, and Strings . . . 102
Consulting and Adding Info Attributes . . . 105
CPU binding . . . 108
Memory binding . . . 113
Changing the Source of Topology Discovery . . . 121
Topology Detection Configuration and Query . . . 124
Modifying a loaded Topology . . . 133
Kinds of object Type . . . 138
Finding Objects inside a CPU set . . . 140
Finding Objects covering at least CPU set . . . 144
Looking at Ancestor and Child Objects . . . 146
Looking at Cache Objects . . . 148
Finding objects, miscellaneous helpers . . . 149
Distributing items over a topology . . . 152
CPU and node sets of entire topologies . . . 154
Converting between CPU sets and node sets . . . 157
Finding I/O objects . . . 158
The bitmap API . . . 160
Exporting Topologies to XML . . . 173
Exporting Topologies to Synthetic . . . 177
Retrieve distances between objects . . . 179
Helpers for consulting distance matrices . . . 184
Add distances between objects . . . 185
Remove distances between objects . . . 188
Comparing memory node attributes for finding where to allocate on . . . 190
Managing memory attributes . . . 196
Kinds of CPU cores . . . 200
Linux-specific helpers . . . 203
Interoperability with Linux libnuma unsigned long masks . . . 205
Interoperability with Linux libnuma bitmask . . . 207
Windows-specific helpers . . . 209
Interoperability with glibc sched affinity . . . 210
Interoperability with OpenCL . . . 211

Interoperability with the CUDA Driver API . . . 213
Interoperability with the CUDA Runtime API . . . 215
Interoperability with the NVIDIA Management Library . . . 217
Interoperability with the ROCm SMI Management Library . . . 219
Interoperability with the oneAPI Level Zero interface. . . . 221
Interoperability with OpenGL displays . . . 222
Interoperability with OpenFabrics . . . 224
Topology differences . . . 226
Sharing topologies between processes . . . 231
Components and Plugins: Discovery components . . . 233
Components and Plugins: Discovery backends . . . 234
Components and Plugins: Generic components . . . 236
Components and Plugins: Core functions to be used by components . . . 237
Components and Plugins: Filtering objects . . . 240
Components and Plugins: helpers for PCI discovery . . . 242
Components and Plugins: finding PCI objects during other discoveries . . . 244

Chapter 22

Data Structure Index

22.1 Data Structures

Here are the data structures with brief descriptions:

hwloc_backend
Discovery backend structure . . . 247
hwloc_obj_attr_u::hwloc_bridge_attr_s
Bridge specific Object Attributes . . . 248
hwloc_obj_attr_u::hwloc_cache_attr_s
Cache-specific Object Attributes . . . 250
hwloc_cl_device_pci_bus_info_khr . . . 250
hwloc_cl_device_topology_amd . . . 251
hwloc_component
Generic component structure . . . 252
hwloc_disc_component
Discovery component structure . . . 254
hwloc_disc_status
Discovery status structure . . . 255
hwloc_distances_s
Matrix of distances between a set of objects . . . 255
hwloc_obj_attr_u::hwloc_group_attr_s
Group-specific Object Attributes . . . 256
hwloc_info_s
Info attribute (name and value strings) . . . 257
hwloc_infos_s
Array of string info attributes (pairs of name and value) . . . 258
hwloc_location
Where to measure attributes from . . . 258
hwloc_location::hwloc_location_u
Actual location . . . 259
hwloc_obj_attr_u::hwloc_numanode_attr_s::hwloc_memory_page_type_s
Array of local memory page types, `NULL` if no local memory and `page_types` is 0 . . . 260
hwloc_obj_attr_u::hwloc_numanode_attr_s
NUMA node-specific Object Attributes . . . 260
hwloc_obj
Structure of a topology object . . . 261
hwloc_obj_attr_u
Object type-specific Attributes . . . 266
hwloc_obj_attr_u::hwloc_osdev_attr_s
OS Device specific Object Attributes . . . 267
hwloc_obj_attr_u::hwloc_pcidev_attr_s
PCI Device specific Object Attributes . . . 268
hwloc_topology_cpubind_support
Flags describing actual PU binding support for this topology . . . 270

hwloc_topology_diff_u::hwloc_topology_diff_generic_s 271
hwloc_topology_diff_obj_attr_u::hwloc_topology_diff_obj_attr_generic_s 272
hwloc_topology_diff_u::hwloc_topology_diff_obj_attr_s 272
hwloc_topology_diff_obj_attr_u::hwloc_topology_diff_obj_attr_string_s
String attribute modification with an optional name 273
hwloc_topology_diff_obj_attr_u
One object attribute difference 274
hwloc_topology_diff_obj_attr_u::hwloc_topology_diff_obj_attr_uint64_s
Integer attribute modification with an optional index 274
hwloc_topology_diff_u::hwloc_topology_diff_too_complex_s 275
hwloc_topology_diff_u
One element of a difference list between two topologies 276
hwloc_topology_discovery_support
Flags describing actual discovery support for this topology 276
hwloc_topology_membind_support
Flags describing actual memory binding support for this topology 277
hwloc_topology_misc_support
Flags describing miscellaneous features 279
hwloc_topology_support
Set of flags describing actual support for this topology 280

Chapter 23

Module Documentation

23.1 Error reporting in the API

Most functions in the hwloc API return an integer value. Unless documentated differently, they return 0 on success and -1 on error. Functions that return a pointer type return `NULL` on error.
`errno` will be set to a meaningful value whenever possible. This includes the usual `EINVAL` when invalid function parameters are passed or `ENOMEM` when an internal allocation fails. Some specific `errno` value are also used, for instance for binding errors as documented in CPU binding.
Some modules describe return values of their functions in their introduction, for instance in The bitmap API.

23.2 API version

Macros

- #define HWLOC_API_VERSION 0x00030000
- #define HWLOC_COMPONENT_ABI 8

Functions

- unsigned hwloc_get_api_version (void)

23.2.1 Detailed Description

23.2.2 Macro Definition Documentation

23.2.2.1 HWLOC_API_VERSION

```
#define HWLOC_API_VERSION 0x00030000
```

Indicate at build time which hwloc API version is being used.
This number is updated to (X<<16)+(Y<<8)+Z when a new release X.Y.Z actually modifies the API.
Users may check for available features at build time using this number (see How do I handle API changes?).

Note

This should not be confused with HWLOC_VERSION, the library version. Two stable releases of the same series usually have the same HWLOC_API_VERSION even if their HWLOC_VERSION are different.

23.2.2.2 HWLOC_COMPONENT_ABI

```
#define HWLOC_COMPONENT_ABI 8
```

Current component and plugin ABI version (see hwloc/plugins.h)

23.2.3 Function Documentation

23.2.3.1 hwloc_get_api_version()

```
unsigned hwloc_get_api_version (
            void  )
```

Indicate at runtime which hwloc API version was used at build time.
Should be HWLOC_API_VERSION if running on the same version.

Returns

the build-time version number.

23.3 Object Sets (hwloc_cpuset_t and hwloc_nodeset_t)

Typedefs

- typedef hwloc_bitmap_t hwloc_cpuset_t
- typedef hwloc_const_bitmap_t hwloc_const_cpuset_t
- typedef hwloc_bitmap_t hwloc_nodeset_t
- typedef hwloc_const_bitmap_t hwloc_const_nodeset_t

23.3.1 Detailed Description

Hwloc uses bitmaps to represent two distinct kinds of object sets: CPU sets (hwloc_cpuset_t) and NUMA node sets (hwloc_nodeset_t). These types are both typedefs to a common back end type (hwloc_bitmap_t), and therefore all the hwloc bitmap functions are applicable to both hwloc_cpuset_t and hwloc_nodeset_t (see The bitmap API).
The rationale for having two different types is that even though the actions one wants to perform on these types are the same (e.g., enable and disable individual items in the set/mask), they're used in very different contexts: one for specifying which processors to use and one for specifying which NUMA nodes to use. Hence, the name difference is really just to reflect the intent of where the type is used.

23.3.2 Typedef Documentation

23.3.2.1 hwloc_const_cpuset_t

`typedef hwloc_const_bitmap_t hwloc_const_cpuset_t`
A non-modifiable hwloc_cpuset_t.

23.3.2.2 hwloc_const_nodeset_t

`typedef hwloc_const_bitmap_t hwloc_const_nodeset_t`
A non-modifiable hwloc_nodeset_t.

23.3.2.3 hwloc_cpuset_t

`typedef hwloc_bitmap_t hwloc_cpuset_t`
A CPU set is a bitmap whose bits are set according to CPU physical OS indexes.
It may be consulted and modified with the bitmap API as any hwloc_bitmap_t (see hwloc/bitmap.h).
Each bit may be converted into a PU object using hwloc_get_pu_obj_by_os_index().

23.3.2.4 hwloc_nodeset_t

`typedef hwloc_bitmap_t hwloc_nodeset_t`
A node set is a bitmap whose bits are set according to NUMA memory node physical OS indexes.
It may be consulted and modified with the bitmap API as any hwloc_bitmap_t (see hwloc/bitmap.h). Each bit may be converted into a NUMA node object using hwloc_get_numanode_obj_by_os_index().
When binding memory on a system without any NUMA node, the single main memory bank is considered as NUMA node #0.
See also Converting between CPU sets and node sets.

23.4 Object Types

Macros

- #define HWLOC_TYPE_UNORDERED

Typedefs

- typedef enum hwloc_obj_cache_type_e hwloc_obj_cache_type_t
- typedef enum hwloc_obj_bridge_type_e hwloc_obj_bridge_type_t
- typedef unsigned long hwloc_obj_osdev_type_t

Enumerations

- enum hwloc_obj_type_t { HWLOC_OBJ_MACHINE, HWLOC_OBJ_PACKAGE, HWLOC_OBJ_CORE, HWLOC_OBJ_PU, HWLOC_OBJ_L1CACHE, HWLOC_OBJ_L2CACHE, HWLOC_OBJ_L3CACHE, HWLOC_OBJ_L4CACHE, HWLOC_OBJ_L5CACHE, HWLOC_OBJ_L1ICACHE, HWLOC_OBJ_L2ICACHE, HWLOC_OBJ_L3ICACHE, HWLOC_OBJ_GROUP, HWLOC_OBJ_NUMANODE, HWLOC_OBJ_BRIDGE, HWLOC_OBJ_PCI_DEVICE, HWLOC_OBJ_OS_DEVICE, HWLOC_OBJ_MISC, HWLOC_OBJ_MEMCACHE, HWLOC_OBJ_DIE }
- enum hwloc_obj_cache_type_e { HWLOC_OBJ_CACHE_UNIFIED, HWLOC_OBJ_CACHE_DATA, HWLOC_OBJ_CACHE_INSTRUCTION }
- enum hwloc_obj_bridge_type_e { HWLOC_OBJ_BRIDGE_HOST, HWLOC_OBJ_BRIDGE_PCI }
- enum hwloc_obj_osdev_type_e { HWLOC_OBJ_OSDEV_STORAGE, HWLOC_OBJ_OSDEV_MEMORY, HWLOC_OBJ_OSDEV_GPU, HWLOC_OBJ_OSDEV_COPROC, HWLOC_OBJ_OSDEV_NETWORK, HWLOC_OBJ_OSDEV_OPENFABRICS, HWLOC_OBJ_OSDEV_DMA }

Functions

- int hwloc_compare_types (hwloc_obj_type_t type1, hwloc_obj_type_t type2)

23.4.1 Detailed Description

23.4.2 Macro Definition Documentation

23.4.2.1 HWLOC_TYPE_UNORDERED

```
#define HWLOC_TYPE_UNORDERED
```

Value returned by hwloc_compare_types() when types can not be compared.

23.4.3 Typedef Documentation

23.4.3.1 hwloc_obj_bridge_type_t

```
typedef enum hwloc_obj_bridge_type_e hwloc_obj_bridge_type_t
```

Type of one side (upstream or downstream) of an I/O bridge.

23.4.3.2 hwloc_obj_cache_type_t

```
typedef enum hwloc_obj_cache_type_e hwloc_obj_cache_type_t
```

Cache type.

23.4.3.3 hwloc_obj_osdev_type_t

`typedef unsigned long hwloc_obj_osdev_type_t`
Type of a OS device. OR'ed set of hwloc_obj_osdev_type_e.

23.4.4 Enumeration Type Documentation

23.4.4.1 hwloc_obj_bridge_type_e

`enum hwloc_obj_bridge_type_e`
Type of one side (upstream or downstream) of an I/O bridge.

Enumerator

HWLOC_OBJ_BRIDGE_HOST	Host-side of a bridge, only possible upstream.
HWLOC_OBJ_BRIDGE_PCI	PCI-side of a bridge.

23.4.4.2 hwloc_obj_cache_type_e

`enum hwloc_obj_cache_type_e`
Cache type.

Enumerator

HWLOC_OBJ_CACHE_UNIFIED	Unified cache.
HWLOC_OBJ_CACHE_DATA	Data cache.
HWLOC_OBJ_CACHE_INSTRUCTION	Instruction cache (filtered out by default).

23.4.4.3 hwloc_obj_osdev_type_e

`enum hwloc_obj_osdev_type_e`
Single type of a OS device. Multiple of these may be combined for a single device.

Enumerator

HWLOC_OBJ_OSDEV_STORAGE	Operating system storage device (e.g. block). For instance "sda" or "pmem0" on Linux, or "dax0.0" if backed by non-volatile memory (may be combined with HWLOC_OBJ_OSDEV_MEMORY).
HWLOC_OBJ_OSDEV_MEMORY	Operating system memory device. For instance "dax2.0" on Linux, either for normal DRAM when not exposed as a NUMA node (e.g. CXL), special-purpose memory (SPM), high-bandwidth memory (HBM), or non-volatile memory (may be combined with HWLOC_OBJ_OSDEV_STORAGE).
HWLOC_OBJ_OSDEV_GPU	Operating system GPU device. For instance ":0.0" for a GL display, "card0" for a Linux DRM device, "cuda0", "rsmi1", "ze0.0" for driver-specific GPU handles (may be combined with HWLOC_OBJ_OSDEV_COPROC).
HWLOC_OBJ_OSDEV_COPROC	Operating system co-processor device. For instance "opencl0d0" for a OpenCL device, "cuda0", "rsmi1", "ze0.0" for driver-specific GPU handles. (may be combined with HWLOC_OBJ_OSDEV_GPU).

Enumerator

HWLOC_OBJ_OSDEV_NETWORK	Operating system network device. For instance the "eth0" interface, "bxi0" Atos/Bull BXI HCA, as well as OpenFabrics HCA. (may be combined with HWLOC_OBJ_OSDEV_OPENFABRICS).
HWLOC_OBJ_OSDEV_OPENFABRICS	Operating system OpenFabrics device. For instance the "mlx4_0" InfiniBand HCA, or "hfi1_0" Omni-Path interface. (usually combined with HWLOC_OBJ_OSDEV_NETWORK).
HWLOC_OBJ_OSDEV_DMA	Operating system dma engine device. For instance the "dma0chan0" DMA channel on Linux.

23.4.4.4 hwloc_obj_type_t

`enum hwloc_obj_type_t`

Type of topology object.

Note

Do not rely on the ordering or completeness of the values as new ones may be defined in the future! If you need to compare types, use hwloc_compare_types() instead.

Enumerator

HWLOC_OBJ_MACHINE	Machine. A set of processors and memory with cache coherency. This type is always used for the root object of a topology, and never used anywhere else. Hence its parent is always `NULL`.
HWLOC_OBJ_PACKAGE	Physical package. The physical package that usually gets inserted into a socket on the motherboard. A processor package usually contains multiple cores, and possibly some dies.
HWLOC_OBJ_CORE	Core. A computation unit (may be shared by several PUs, aka logical processors).
HWLOC_OBJ_PU	Processing Unit, or (Logical) Processor. An execution unit (may share a core with some other logical processors, e.g. in the case of an SMT core). This is the smallest object representing CPU resources, it cannot have any child except Misc objects. Objects of this kind are always reported and can thus be used as fallback when others are not.
HWLOC_OBJ_L1CACHE	Level 1 Data (or Unified) Cache.
HWLOC_OBJ_L2CACHE	Level 2 Data (or Unified) Cache.
HWLOC_OBJ_L3CACHE	Level 3 Data (or Unified) Cache.
HWLOC_OBJ_L4CACHE	Level 4 Data (or Unified) Cache.
HWLOC_OBJ_L5CACHE	Level 5 Data (or Unified) Cache.
HWLOC_OBJ_L1ICACHE	Level 1 instruction Cache (filtered out by default).
HWLOC_OBJ_L2ICACHE	Level 2 instruction Cache (filtered out by default).
HWLOC_OBJ_L3ICACHE	Level 3 instruction Cache (filtered out by default).
HWLOC_OBJ_GROUP	Group objects. Objects which do not fit in the above but are detected by hwloc and are useful to take into account for affinity. For instance, some operating systems expose their arbitrary processors aggregation this way. And hwloc may insert such objects to group NUMA nodes according to their distances. See also What are these Group objects in my topology?. These objects are removed when they do not bring any structure (see HWLOC_TYPE_FILTER_KEEP_STRUCTURE).

Enumerator

HWLOC_OBJ_NUMANODE	NUMA node. An object that contains memory that is directly and byte-accessible to the host processors. It is usually close to some cores (the corresponding objects are descendants of the NUMA node object in the hwloc tree). This is the smallest object representing Memory resources, it cannot have any child except Misc objects. However it may have Memory-side cache parents. NUMA nodes may correspond to different kinds of memory (DRAM, HBM, CXL-DRAM, etc.). When hwloc is able to guess that kind, it is specified in the subtype field of the object. See also Normal attributes in the main documentation. There is always at least one such object in the topology even if the machine is not NUMA. Memory objects are not listed in the main children list, but rather in the dedicated Memory children list. NUMA nodes have a special depth HWLOC_TYPE_DEPTH_NUMANODE instead of a normal depth just like other objects in the main tree.
HWLOC_OBJ_BRIDGE	Bridge (filtered out by default). Any bridge (or PCI switch) that connects the host or an I/O bus, to another I/O bus. Bridges are not added to the topology unless their filtering is changed (see hwloc_topology_set_type_filter() and hwloc_topology_set_io_types_filter()). I/O objects are not listed in the main children list, but rather in the dedicated io children list. I/O objects have NULL CPU and node sets.
HWLOC_OBJ_PCI_DEVICE	PCI device (filtered out by default). PCI devices are not added to the topology unless their filtering is changed (see hwloc_topology_set_type_filter() and hwloc_topology_set_io_types_filter()). I/O objects are not listed in the main children list, but rather in the dedicated io children list. I/O objects have NULL CPU and node sets.
HWLOC_OBJ_OS_DEVICE	Operating system device (filtered out by default). OS devices are not added to the topology unless their filtering is changed (see hwloc_topology_set_type_filter() and hwloc_topology_set_io_types_filter()). I/O objects are not listed in the main children list, but rather in the dedicated io children list. I/O objects have NULL CPU and node sets.
HWLOC_OBJ_MISC	Miscellaneous objects (filtered out by default). Objects without particular meaning, that can e.g. be added by the application for its own use, or by hwloc for miscellaneous objects such as MemoryModule (DIMMs). They are not added to the topology unless their filtering is changed (see hwloc_topology_set_type_filter()). These objects are not listed in the main children list, but rather in the dedicated misc children list. Misc objects may only have Misc objects as children, and those are in the dedicated misc children list as well. Misc objects have NULL CPU and node sets.
HWLOC_OBJ_MEMCACHE	Memory-side cache (filtered out by default). A cache in front of a specific NUMA node. This object always has at least one NUMA node as a memory child. Memory objects are not listed in the main children list, but rather in the dedicated Memory children list. Memory-side cache have a special depth HWLOC_TYPE_DEPTH_MEMCACHE instead of a normal depth just like other objects in the main tree.
HWLOC_OBJ_DIE	Die within a physical package. A subpart of the physical package, that contains multiple cores. Some operating systems (e.g. Linux) may expose a single die per package even if the hardware does not support dies at all. To avoid showing such non-existing dies, the corresponding hwloc backend may filter them out. This is functionally equivalent to HWLOC_TYPE_FILTER_KEEP_STRUCTURE being enforced.

23.4.5 Function Documentation

23.4.5.1 hwloc_compare_types()

```
int hwloc_compare_types (
            hwloc_obj_type_t type1,
            hwloc_obj_type_t type2 )
```

Compare the depth of two object types.
Types shouldn't be compared as they are, since newer ones may be added in the future.

Returns

A negative integer if `type1` objects usually include `type2` objects.

A positive integer if `type1` objects are usually included in `type2` objects.

0 if `type1` and `type2` objects are the same.

HWLOC_TYPE_UNORDERED if objects cannot be compared (because neither is usually contained in the other).

Note

Object types containing CPUs can always be compared (usually, a machine contains packages, which contain caches, which contain cores, which contain PUs).

HWLOC_OBJ_PU will always be the deepest, while HWLOC_OBJ_MACHINE is always the highest.

This does not mean that the actual topology will respect that order: e.g. as of today cores may also contain caches, and packages may also contain nodes. This is thus just to be seen as a fallback comparison method.

23.5 Object Structure and Attributes

Data Structures

- struct hwloc_info_s
- struct hwloc_infos_s
- struct hwloc_obj
- union hwloc_obj_attr_u

Typedefs

- typedef struct hwloc_obj ∗ hwloc_obj_t

23.5.1 Detailed Description

23.5.2 Typedef Documentation

23.5.2.1 hwloc_obj_t

```
typedef struct hwloc_obj* hwloc_obj_t
```

Convenience typedef; a pointer to a struct hwloc_obj.

23.6 Topology Creation and Destruction

Typedefs

- typedef struct hwloc_topology * hwloc_topology_t

Functions

- int hwloc_topology_init (hwloc_topology_t *topologyp)
- int hwloc_topology_load (hwloc_topology_t topology)
- void hwloc_topology_destroy (hwloc_topology_t topology)
- int hwloc_topology_dup (hwloc_topology_t *newtopology, hwloc_topology_t oldtopology)
- int hwloc_topology_abi_check (hwloc_topology_t topology)
- void hwloc_topology_check (hwloc_topology_t topology)

23.6.1 Detailed Description

23.6.2 Typedef Documentation

23.6.2.1 hwloc_topology_t

```
typedef struct hwloc_topology* hwloc_topology_t
```

Topology context.
To be initialized with hwloc_topology_init() and built with hwloc_topology_load().

23.6.3 Function Documentation

23.6.3.1 hwloc_topology_abi_check()

```
int hwloc_topology_abi_check (
            hwloc_topology_t topology )
```

Verify that the topology is compatible with the current hwloc library.
This is useful when using the same topology structure (in memory) in different libraries that may use different hwloc installations (for instance if one library embeds a specific version of hwloc, while another library uses a default system-wide hwloc installation).
If all libraries/programs use the same hwloc installation, this function always returns success.

Returns

`0` on success.

`-1` with `errno` set to `EINVAL` if incompatible.

Note

If sharing between processes with hwloc_shmem_topology_write(), the relevant check is already performed inside hwloc_shmem_topology_adopt().

23.6.3.2 hwloc_topology_check()

```
void hwloc_topology_check (
            hwloc_topology_t topology )
```

Run internal checks on a topology structure.
The program aborts if an inconsistency is detected in the given topology.

Parameters

topology	is the topology to be checked

Note

This routine is only useful to developers.

The input topology should have been previously loaded with hwloc_topology_load().

23.6.3.3 hwloc_topology_destroy()

```
void hwloc_topology_destroy (
            hwloc_topology_t topology )
```

Terminate and free a topology context.

Parameters

topology	is the topology to be freed

23.6.3.4 hwloc_topology_dup()

```
int hwloc_topology_dup (
            hwloc_topology_t * newtopology,
            hwloc_topology_t oldtopology )
```

Duplicate a topology.
The entire topology structure as well as its objects are duplicated into a new one.
This is useful for keeping a backup while modifying a topology.

Returns

0 on success, -1 on error.

Note

Object userdata is not duplicated since hwloc does not know what it point to. The objects of both old and new topologies will point to the same userdata.

23.6.3.5 hwloc_topology_init()

```
int hwloc_topology_init (
            hwloc_topology_t * topologyp )
```

Allocate a topology context.

Parameters

out	*topologyp*	is assigned a pointer to the new allocated context.

Returns

0 on success, -1 on error.

23.6.3.6 hwloc_topology_load()

```
int hwloc_topology_load (
            hwloc_topology_t topology )
```

Build the actual topology.

Build the actual topology once initialized with hwloc_topology_init() and tuned with Topology Detection Configuration and Query and Changing the Source of Topology Discovery routines. No other routine may be called earlier using this topology context.

Parameters

topology	is the topology to be loaded with objects.

Returns

0 on success, -1 on error.

Note

On failure, the topology is reinitialized. It should be either destroyed with hwloc_topology_destroy() or configured and loaded again.

This function may be called only once per topology.

The binding of the current thread or process may temporarily change during this call but it will be restored before it returns.

See also

Topology Detection Configuration and Query and Changing the Source of Topology Discovery

23.7 Object levels, depths and types

Enumerations

- enum hwloc_get_type_depth_e {
  HWLOC_TYPE_DEPTH_UNKNOWN, HWLOC_TYPE_DEPTH_MULTIPLE, HWLOC_TYPE_DEPTH_NUMANODE, HWLOC_TYPE_DEPTH_BRIDGE,
  HWLOC_TYPE_DEPTH_PCI_DEVICE, HWLOC_TYPE_DEPTH_OS_DEVICE, HWLOC_TYPE_DEPTH_MISC, HWLOC_TYPE_DEPTH_MEMCACHE }

Functions

- int hwloc_topology_get_depth (hwloc_topology_t restrict topology)
- int hwloc_get_type_depth (hwloc_topology_t topology, hwloc_obj_type_t type)
- int hwloc_get_type_depth_with_attr (hwloc_topology_t topology, hwloc_obj_type_t type, union hwloc_obj_attr_u *attrp, size_t attrsize)
- int hwloc_get_memory_parents_depth (hwloc_topology_t topology)
- static int hwloc_get_type_or_below_depth (hwloc_topology_t topology, hwloc_obj_type_t type)
- static int hwloc_get_type_or_above_depth (hwloc_topology_t topology, hwloc_obj_type_t type)
- hwloc_obj_type_t hwloc_get_depth_type (hwloc_topology_t topology, int depth)
- unsigned hwloc_get_nbobjs_by_depth (hwloc_topology_t topology, int depth)
- static int hwloc_get_nbobjs_by_type (hwloc_topology_t topology, hwloc_obj_type_t type)
- static hwloc_obj_t hwloc_get_root_obj (hwloc_topology_t topology)
- hwloc_obj_t hwloc_get_obj_by_depth (hwloc_topology_t topology, int depth, unsigned idx)
- static hwloc_obj_t hwloc_get_obj_by_type (hwloc_topology_t topology, hwloc_obj_type_t type, unsigned idx)
- static hwloc_obj_t hwloc_get_next_obj_by_depth (hwloc_topology_t topology, int depth, hwloc_obj_t prev)
- static hwloc_obj_t hwloc_get_next_obj_by_type (hwloc_topology_t topology, hwloc_obj_type_t type, hwloc_obj_t prev)

23.7.1 Detailed Description

Be sure to see the figure in Terms and Definitions that shows a complete topology tree, including depths, child/sibling/cousin relationships, and an example of an asymmetric topology where one package has fewer caches than its peers.

23.7.2 Enumeration Type Documentation

23.7.2.1 hwloc_get_type_depth_e

`enum hwloc_get_type_depth_e`

Enumerator

HWLOC_TYPE_DEPTH_UNKNOWN	No object of given type exists in the topology.
HWLOC_TYPE_DEPTH_MULTIPLE	Objects of given type exist at different depth in the topology (only for Groups).
HWLOC_TYPE_DEPTH_NUMANODE	Virtual depth for NUMA nodes.
HWLOC_TYPE_DEPTH_BRIDGE	Virtual depth for bridge object level.
HWLOC_TYPE_DEPTH_PCI_DEVICE	Virtual depth for PCI device object level.
HWLOC_TYPE_DEPTH_OS_DEVICE	Virtual depth for software device object level.
HWLOC_TYPE_DEPTH_MISC	Virtual depth for Misc object.
HWLOC_TYPE_DEPTH_MEMCACHE	Virtual depth for MemCache object.

23.7.3 Function Documentation

23.7.3.1 hwloc_get_depth_type()

```
hwloc_obj_type_t hwloc_get_depth_type (
            hwloc_topology_t topology,
            int depth )
```

Returns the type of objects at depth `depth`.
`depth` should between 0 and hwloc_topology_get_depth()-1, or a virtual depth such as HWLOC_TYPE_DEPTH_NUMANODE.

Returns

The type of objects at depth `depth`.

(hwloc_obj_type_t)-1 if depth `depth` does not exist.

23.7.3.2 hwloc_get_memory_parents_depth()

```
int hwloc_get_memory_parents_depth (
            hwloc_topology_t topology )
```

Return the depth of parents where memory objects are attached.
Memory objects have virtual negative depths because they are not part of the main CPU-side hierarchy of objects. This depth should not be compared with other level depths.
If all Memory objects are attached to Normal parents at the same depth, this parent depth may be compared to other as usual, for instance for knowing whether NUMA nodes is attached above or below Packages.

Returns

The depth of Normal parents of all memory children if all these parents have the same depth. For instance the depth of the Package level if all NUMA nodes are attached to Package objects.

HWLOC_TYPE_DEPTH_MULTIPLE if Normal parents of all memory children do not have the same depth. For instance if some NUMA nodes are attached to Packages while others are attached to Groups.

23.7.3.3 hwloc_get_nbobjs_by_depth()

```
unsigned hwloc_get_nbobjs_by_depth (
            hwloc_topology_t topology,
            int depth )
```

Returns the width of level at depth `depth`.

Returns

The number of objects at topology depth `depth`.

0 if there are no objects at depth `depth`.

23.7.3.4 hwloc_get_nbobjs_by_type()

```
static int hwloc_get_nbobjs_by_type (
            hwloc_topology_t topology,
            hwloc_obj_type_t type )  [inline], [static]
```

Returns the width of level type `type`.

Returns

The number of objects of type `type`.

-1 if there are multiple levels with objects of that type, e.g. HWLOC_OBJ_GROUP.

0 if there are no objects at depth `depth`.

23.7.3.5 hwloc_get_next_obj_by_depth()

```
static hwloc_obj_t hwloc_get_next_obj_by_depth (
            hwloc_topology_t topology,
            int depth,
            hwloc_obj_t prev )  [inline], [static]
```

Returns the next object at depth `depth`.

Returns

The first object at depth `depth` if `prev` is `NULL`.

The object after `prev` at depth `depth` if `prev` is not `NULL`.

`NULL` if there is no such object.

23.7.3.6 hwloc_get_next_obj_by_type()

```
static hwloc_obj_t hwloc_get_next_obj_by_type (
            hwloc_topology_t topology,
            hwloc_obj_type_t type,
            hwloc_obj_t prev )  [inline], [static]
```

Returns the next object of type `type`.

Returns

The first object of type `type` if `prev` is `NULL`.

The object after `prev` of type `type` if `prev` is not `NULL`.

`NULL` if there is no such object.

`NULL` if there are multiple levels with objects of that type (e.g. HWLOC_OBJ_GROUP), the caller may fallback to hwloc_get_obj_by_depth().

23.7.3.7 hwloc_get_obj_by_depth()

```
hwloc_obj_t hwloc_get_obj_by_depth (
            hwloc_topology_t topology,
            int depth,
            unsigned idx )
```

Returns the topology object at logical index `idx` from depth `depth`.

Returns

The object if it exists.

`NULL` if there is no object with this index and depth.

23.7.3.8 hwloc_get_obj_by_type()

```
static hwloc_obj_t hwloc_get_obj_by_type (
            hwloc_topology_t topology,
            hwloc_obj_type_t type,
            unsigned idx )  [inline], [static]
```

Returns the topology object at logical index `idx` with type `type`.

Returns

The object if it exists.

`NULL` if there is no object with this index and type.

`NULL` if there are multiple levels with objects of that type (e.g. HWLOC_OBJ_GROUP), the caller may fallback to hwloc_get_obj_by_depth().

23.7.3.9 hwloc_get_root_obj()

```
static hwloc_obj_t hwloc_get_root_obj (
            hwloc_topology_t topology )  [inline], [static]
```

Returns the top-object of the topology-tree.
Its type is HWLOC_OBJ_MACHINE.
This function cannot return `NULL`.

23.7.3.10 hwloc_get_type_depth()

```
int hwloc_get_type_depth (
            hwloc_topology_t topology,
            hwloc_obj_type_t type )
```

Returns the depth of objects of type `type`.

Returns

The depth of objects of type `type`.

A negative virtual depth if a NUMA node, I/O or Misc object type is given. These objects are stored in special levels that are not CPU-related. This virtual depth may be passed to other hwloc functions such as hwloc_get_obj_by_depth() but it should not be considered as an actual depth by the application. In particular, it should not be compared with any other object depth or with the entire topology depth.

HWLOC_TYPE_DEPTH_UNKNOWN if no object of this type is present on the underlying architecture, or if the OS doesn't provide this kind of information.

HWLOC_TYPE_DEPTH_MULTIPLE if type HWLOC_OBJ_GROUP is given and multiple levels of Groups exist.

Note

If the type is absent but a similar type is acceptable, see also hwloc_get_type_or_below_depth() and hwloc_get_type_or_above_depth().

See also

hwloc_get_memory_parents_depth() for managing the depth of memory objects.

hwloc_get_type_depth_with_attr() for disambiguating cases where HWLOC_TYPE_DEPTH_MULTIPLE is returned.

23.7.3.11 hwloc_get_type_depth_with_attr()

```
int hwloc_get_type_depth_with_attr (
            hwloc_topology_t topology,
            hwloc_obj_type_t type,
            union hwloc_obj_attr_u * attrp,
            size_t attrsize )
```

Returns the depth of objects of type `and` attributes `attrp`.
This is identical to hwloc_get_type_depth() but may disambiguate multiple levels with same type by looking at object attributes given in `attrp` (the attribute structure size should also be given in `attrsize`). For instance these attributes may specify the Group depth.
These attributes may for instance have been previously obtained with hwloc_type_sscanf().
If `attrp` is `NULL` and `attrsize` is `0`, attributes are ignored and the function behaves as hwloc_get_type_depth().

23.7.3.12 hwloc_get_type_or_above_depth()

```
static int hwloc_get_type_or_above_depth (
            hwloc_topology_t topology,
            hwloc_obj_type_t type )  [inline], [static]
```

Returns the depth of objects of type `type` or above.
If no object of this type is present on the underlying architecture, the function returns the depth of the first "present" object typically containing `type`.
This function is only meaningful for normal object types. If a memory, I/O or Misc object type is given, the corresponding virtual depth is always returned (see hwloc_get_type_depth()).
May return HWLOC_TYPE_DEPTH_MULTIPLE for HWLOC_OBJ_GROUP just like hwloc_get_type_depth().

23.7.3.13 hwloc_get_type_or_below_depth()

```
static int hwloc_get_type_or_below_depth (
            hwloc_topology_t topology,
            hwloc_obj_type_t type )  [inline], [static]
```

Returns the depth of objects of type `type` or below.
If no object of this type is present on the underlying architecture, the function returns the depth of the first "present" object typically found inside `type`.
This function is only meaningful for normal object types. If a memory, I/O or Misc object type is given, the corresponding virtual depth is always returned (see hwloc_get_type_depth()).
May return HWLOC_TYPE_DEPTH_MULTIPLE for HWLOC_OBJ_GROUP just like hwloc_get_type_depth().

23.7.3.14 hwloc_topology_get_depth()

```
int hwloc_topology_get_depth (
            hwloc_topology_t restrict topology )
```

Get the depth of the hierarchical tree of objects.
This is the depth of HWLOC_OBJ_PU objects plus one.

Returns

the depth of the object tree.

Note

NUMA nodes, I/O and Misc objects are ignored when computing the depth of the tree (they are placed on special levels).

23.8 Converting between Object Types and Attributes, and Strings

Enumerations

- enum hwloc_obj_snprintf_flag_e { HWLOC_OBJ_SNPRINTF_FLAG_LONG_NAMES, HWLOC_OBJ_SNPRINTF_FLAG_SHORT_NAMES, HWLOC_OBJ_SNPRINTF_FLAG_MORE_ATTRS, HWLOC_OBJ_SNPRINTF_FLAG_NO_UNITS, HWLOC_OBJ_SNPRINTF_FLAG_UNITS_1000, HWLOC_OBJ_SNPRINTF_FLAG_OLD_VERBOSE }

Functions

- const char * hwloc_obj_type_string (hwloc_obj_type_t type)
- int hwloc_obj_type_snprintf (char *restrict string, size_t size, hwloc_obj_t obj, unsigned long flags)
- int hwloc_obj_attr_snprintf (char *restrict string, size_t size, hwloc_obj_t obj, const char *restrict separator, unsigned long flags)
- int hwloc_type_sscanf (const char *string, hwloc_obj_type_t *typep, union hwloc_obj_attr_u *attrp, size_t attrsize)

23.8.1 Detailed Description

23.8.2 Enumeration Type Documentation

23.8.2.1 hwloc_obj_snprintf_flag_e

`enum hwloc_obj_snprintf_flag_e`

Flags to be given to hwloc_obj_type_snprintf() and hwloc_obj_attr_snprintf().

Enumerator

HWLOC_OBJ_SNPRINTF_FLAG_LONG_NAMES	Use long type names such as L2Cache instead of L2.
HWLOC_OBJ_SNPRINTF_FLAG_SHORT_NAMES	Reduce the name even if it may become ambiguous, for instance by removing the OS device prefix and showing a single type. hwloc_type_sscanf() might not be able to parse it back exactly anymore.
HWLOC_OBJ_SNPRINTF_FLAG_MORE_ATTRS	Display additional attributes such as cache associativity, PCI link speed, and total memory.
HWLOC_OBJ_SNPRINTF_FLAG_NO_UNITS	Display memory sizes in bytes without units.
HWLOC_OBJ_SNPRINTF_FLAG_UNITS_1000	Display memory sizes in KB, MB, GB, etc i.e. divide by 1000 instead of 1024 for KiB, MiB, GiB, etc.
HWLOC_OBJ_SNPRINTF_FLAG_OLD_VERBOSE	Backward compatibility with hwloc 2.x verbose mode, shows additional attributes, and memory sizes with KB unit but KiB values.

23.8.3 Function Documentation

23.8.3.1 hwloc_obj_attr_snprintf()

```
int hwloc_obj_attr_snprintf (
            char *restrict string,
            size_t size,
            hwloc_obj_t obj,
            const char *restrict separator,
            unsigned long flags )
```

Stringify the attributes of a given topology object into a human-readable form.
Attribute values are separated by `separator`.
Only the major attributes are printed in non-verbose mode.
If `size` is 0, `string` may safely be `NULL`.
Flags `flags` is a OR'ed set of hwloc_obj_snprintf_flag_e. By default, only important attributes such as memory and cache sizes are shown. Sizes are reported in units such as GiB or KiB.

Returns

the number of characters that were actually written if not truncating, or that would have been written (not including the ending \0).

Note

By default the output string is reasonably short without being ambiguous so that hwloc_type_sscanf() may parse it back.

23.8.3.2 hwloc_obj_type_snprintf()

```
int hwloc_obj_type_snprintf (
            char *restrict string,
            size_t size,
            hwloc_obj_t obj,
            unsigned long flags )
```

Stringify the type of a given topology object into a human-readable form.
Contrary to hwloc_obj_type_string(), this function includes object-specific attributes (such as the Group depth, the Bridge type, or OS device type) in the output, and it requires the caller to provide the output buffer.
The output is guaranteed to be the same for all objects of a same topology level.
The output string may be parsed back by hwloc_type_sscanf().
If `size` is 0, `string` may safely be `NULL`.
Flags `flags` is a OR'ed set of hwloc_obj_snprintf_flag_e. By default, short names are used.

Returns

the number of characters that were actually written if not truncating, or that would have been written (not including the ending \0).

23.8.3.3 hwloc_obj_type_string()

```
const char* hwloc_obj_type_string (
            hwloc_obj_type_t type )
```

Return a constant stringified object type.
This function is the basic way to convert a generic type into a string. The output string may be parsed back by hwloc_type_sscanf().
hwloc_obj_type_snprintf() may return a more precise output for a specific object, but it requires the caller to provide the output buffer.

Returns

A constant string containing the object type name or `"Unknown"`.

23.8.3.4 hwloc_type_sscanf()

```
int hwloc_type_sscanf (
            const char * string,
            hwloc_obj_type_t * typep,
```

```
union hwloc_obj_attr_u * attrp,
size_t attrsize )
```

Return an object type and attributes from a type string.

Convert strings such as "Package" or "L1iCache" into the corresponding types. Matching is case-insensitive, and only the first letters are actually required to match.

The matched object type is set in `typep` (which cannot be `NULL`).

Type-specific attributes, for instance Cache type, Cache depth, Group depth, Bridge type or OS Device type may be returned in `attrp`. Attributes that are not specified in the string (for instance "Group" without a depth, or "L2Cache" without a cache type) are set to `-1`. The OS-device-specific type attribute is rather set to `0`.

`attrp` is only filled if not `NULL` and if its size specified in `attrsize` is large enough. It should be at least as large as union hwloc_obj_attr_u.

Returns

0 if a type was correctly identified, otherwise -1.

Note

This function is guaranteed to match any string returned by hwloc_obj_type_string() or hwloc_obj_type_snprintf() except if HWLOC_OBJ_SNPRINTF_FLAG_SHORT_NAMES was given.

23.9 Consulting and Adding Info Attributes

Enumerations

- enum hwloc_modify_infos_op_e { HWLOC_MODIFY_INFOS_OP_ADD, HWLOC_MODIFY_INFOS_OP_ADD_UNIQUE, HWLOC_MODIFY_INFOS_OP_REPLACE, HWLOC_MODIFY_INFOS_OP_REMOVE }

Functions

- static const char ∗ hwloc_obj_get_info_by_name (hwloc_obj_t obj, const char ∗name)
- static const char ∗ hwloc_get_info_by_name (struct hwloc_infos_s ∗infos, const char ∗name)
- int hwloc_modify_infos (struct hwloc_infos_s ∗infos, unsigned long operation, const char ∗name, const char ∗value)
- static int hwloc_obj_add_info (hwloc_obj_t obj, const char ∗name, const char ∗value)
- struct hwloc_infos_s ∗ hwloc_topology_get_infos (hwloc_topology_t topology)
- int hwloc_obj_set_subtype (hwloc_topology_t topology, hwloc_obj_t obj, const char ∗subtype)

23.9.1 Detailed Description

23.9.2 Enumeration Type Documentation

23.9.2.1 hwloc_modify_infos_op_e

`enum hwloc_modify_infos_op_e`

Operations given to hwloc_modify_infos().

Enumerator

HWLOC_MODIFY_INFOS_OP_ADD	Add a new info attribute with the given name and value. **Returns** `1` if the pair was successfully added.
HWLOC_MODIFY_INFOS_OP_ADD_UNIQUE	Add a new info attribute with the given name and value only if that pair doesn't exist yet. **Returns** `1` if the pair was successfully added. `0` if the pair already existed.
HWLOC_MODIFY_INFOS_OP_REPLACE	Replace existing info attributes with the given name, with a single attribute with the given name and value. If no existing pair matches, add a new one. If multiple pairs match, only one remains. **Returns** `1` if the pair was added. `N+1` if N existing pairs were replaced by one.
HWLOC_MODIFY_INFOS_OP_REMOVE	Remove existing info attributes that matches the given name and/or value if not `NULL`. **Returns** `N` if N existing pairs were removed. `0` if no matching pair was found and removed.

23.9.3 Function Documentation

23.9.3.1 hwloc_get_info_by_name()

```
static const char* hwloc_get_info_by_name (
            struct hwloc_infos_s * infos,
            const char * name )  [inline], [static]
```

Search the given name in the array of infos and return the corresponding value.
If multiple info attributes match the given name, only the first one is returned.

Returns

A pointer to the value string if it exists.

`NULL` if no such info attribute exists.

Note

The string should not be freed by the caller, it belongs to the hwloc library.

23.9.3.2 hwloc_modify_infos()

```
int hwloc_modify_infos (
            struct hwloc_infos_s * infos,
            unsigned long operation,
            const char * name,
            const char * value )
```

Modify an array of info attributes.
`operation` is a single value among hwloc_modify_infos_op_e.
If adding (HWLOC_MODIFY_INFOS_OP_ADD or HWLOC_MODIFY_INFOS_OP_ADD_UNIQUE) or replacing (HWLOC_MODIFY_INFOS_OP_REPLACE) an info attribute, `name` and `value` cannot be `NULL`. The input strings are copied before being added in the object infos.
If removing existing info pairs (HWLOC_MODIFY_INFOS_OP_REMOVE), `name` and/or `value` may be non `NULL` to specify which pair(s) to remove. If both `name` and `value` are `NULL`, all pairs are removed.

Returns

a positive value if some info attributes were added/modified/removed (see the documentation of each operation).

`0` if the request was valid but no change was applied.

`-1` on error.

Note

If `value` contains some non-printable characters, they will be dropped when exporting to XML, see hwloc_topology_export_xml() in hwloc/export.h.

23.9.3.3 hwloc_obj_add_info()

```
static int hwloc_obj_add_info (
            hwloc_obj_t obj,
            const char * name,
            const char * value )  [inline], [static]
```

Add the given name and value pair to the given object info attributes.
The info pair is appended to the existing info array even if another pair with the same name already exists. See hwloc_modify_infos() for a more flexible variant.
The input strings are copied before being added in the object infos.
`name` and `value` must be non `NULL`.

Returns

0 on success, -1 on error.

Note

This function may be used to enforce object colors in the lstopo graphical output by adding "lstopoStyle" as a name and "Background=#rrggbb" as a value. See CUSTOM COLORS in the lstopo(1) manpage for details.

If name or value contain some non-printable characters, they will be dropped when exporting to XML, see hwloc_topology_export_xml() in hwloc/export.h.

23.9.3.4 hwloc_obj_get_info_by_name()

```
static const char* hwloc_obj_get_info_by_name (
            hwloc_obj_t obj,
            const char * name )  [inline], [static]
```

Search the given name in the object array of infos and return the corresponding value.
Identical to hwloc_get_info_by_name() but operates on the infos of the given object.

23.9.3.5 hwloc_obj_set_subtype()

```
int hwloc_obj_set_subtype (
            hwloc_topology_t topology,
            hwloc_obj_t obj,
            const char * subtype )
```

Set (or replace) the subtype of an object.
The given subtype is copied internally, the caller is responsible for freeing the original subtype if needed.
If another subtype already exists in object, it is replaced. The given subtype may be NULL to remove the existing subtype.

Note

This function is mostly meant to initialize the subtype of user-added objects such as groups with hwloc_topology_alloc_group_object().

Returns

0 on success.

-1 with errno set to ENOMEM on failure to allocate memory.

23.9.3.6 hwloc_topology_get_infos()

```
struct hwloc_infos_s* hwloc_topology_get_infos (
            hwloc_topology_t topology )
```

Get the structure of info attributes attached to the topology.
These attributes contain information about the topology discovery (backends) and about the operating system.

Note

The function cannot return NULL.

The returned pointer belongs to the hwloc library, it should not be freed or modified.

23.10 CPU binding

Enumerations

- enum hwloc_cpubind_flags_t { HWLOC_CPUBIND_PROCESS, HWLOC_CPUBIND_THREAD, HWLOC_CPUBIND_STRICT, HWLOC_CPUBIND_NOMEMBIND }

Functions

- int hwloc_set_cpubind (hwloc_topology_t topology, hwloc_const_cpuset_t set, int flags)
- int hwloc_get_cpubind (hwloc_topology_t topology, hwloc_cpuset_t set, int flags)
- int hwloc_set_proc_cpubind (hwloc_topology_t topology, hwloc_pid_t pid, hwloc_const_cpuset_t set, int flags)
- int hwloc_get_proc_cpubind (hwloc_topology_t topology, hwloc_pid_t pid, hwloc_cpuset_t set, int flags)
- int hwloc_set_thread_cpubind (hwloc_topology_t topology, hwloc_thread_t thread, hwloc_const_cpuset_t set, int flags)
- int hwloc_get_thread_cpubind (hwloc_topology_t topology, hwloc_thread_t thread, hwloc_cpuset_t set, int flags)
- int hwloc_get_last_cpu_location (hwloc_topology_t topology, hwloc_cpuset_t set, int flags)
- int hwloc_get_proc_last_cpu_location (hwloc_topology_t topology, hwloc_pid_t pid, hwloc_cpuset_t set, int flags)

23.10.1 Detailed Description

Some operating systems only support binding threads or processes to a single PU. Others allow binding to larger sets such as entire Cores or Packages or even random sets of individual PUs. In such operating system, the scheduler is free to run the task on one of these PU, then migrate it to another PU, etc. It is often useful to call hwloc_bitmap_singlify() on the target CPU set before passing it to the binding function to avoid these expensive migrations. See the documentation of hwloc_bitmap_singlify() for details.
Some operating systems do not provide all hwloc-supported mechanisms to bind processes, threads, etc. hwloc_topology_get_support() may be used to query about the actual CPU binding support in the currently used operating system.
When the requested binding operation is not available and the HWLOC_CPUBIND_STRICT flag was passed, the function returns -1. `errno` is set to `ENOSYS` when it is not possible to bind the requested kind of object processes/threads. errno is set to `EXDEV` when the requested cpuset can not be enforced (e.g. some systems only allow one CPU, and some other systems only allow one NUMA node).
If HWLOC_CPUBIND_STRICT was not passed, the function may fail as well, or the operating system may use a slightly different operation (with side-effects, smaller binding set, etc.) when the requested operation is not exactly supported.
The most portable version that should be preferred over the others, whenever possible, is the following one which just binds the current program, assuming it is single-threaded:

```
hwloc_set_cpubind(topology, set, 0),
```

If the program may be multithreaded, the following one should be preferred to only bind the current thread:

```
hwloc_set_cpubind(topology, set, HWLOC_CPUBIND_THREAD),
```

See also

Some example codes are available under doc/examples/ in the source tree.

Note

To unbind, just call the binding function with either a full cpuset or a cpuset equal to the system cpuset.

On some operating systems, CPU binding may have effects on memory binding, see HWLOC_CPUBIND_NOMEMBIND

Running lstopo --top or hwloc-ps can be a very convenient tool to check how binding actually happened.

23.10.2 Enumeration Type Documentation

23.10.2.1 hwloc_cpubind_flags_t

`enum hwloc_cpubind_flags_t`

Process/Thread binding flags.

These bit flags can be used to refine the binding policy.

The default (0) is to bind the current process, assumed to be single-threaded, in a non-strict way. This is the most portable way to bind as all operating systems usually provide it.

Note

Not all systems support all kinds of binding. See the "Detailed Description" section of CPU binding for a description of errors that can occur.

Enumerator

HWLOC_CPUBIND_PROCESS	Bind all threads of the current (possibly) multithreaded process.
HWLOC_CPUBIND_THREAD	Bind current thread of current process.
HWLOC_CPUBIND_STRICT	Request for strict binding from the OS. By default, when the designated CPUs are all busy while other CPUs are idle, operating systems may execute the thread/process on those other CPUs instead of the designated CPUs, to let them progress anyway. Strict binding means that the thread/process will _never_ execute on other CPUs than the designated CPUs, even when those are busy with other tasks and other CPUs are idle. **Note** Depending on the operating system, strict binding may not be possible (e.g., the OS does not implement it) or not allowed (e.g., for an administrative reasons), and the function will fail in that case. When retrieving the binding of a process, this flag checks whether all its threads actually have the same binding. If the flag is not given, the binding of each thread will be accumulated. **Note** This flag is meaningless when retrieving the binding of a thread.
HWLOC_CPUBIND_NOMEMBIND	Avoid any effect on memory binding. On some operating systems, some CPU binding function would also bind the memory on the corresponding NUMA node. It is often not a problem for the application, but if it is, setting this flag will make hwloc avoid using OS functions that would also bind memory. This will however reduce the support of CPU bindings, i.e. potentially return -1 with errno set to `ENOSYS` in some cases. This flag is only meaningful when used with functions that set the CPU binding. It is ignored when used with functions that get CPU binding information.

23.10.3 Function Documentation

23.10.3.1 hwloc_get_cpubind()

```
int hwloc_get_cpubind (
            hwloc_topology_t topology,
            hwloc_cpuset_t set,
            int flags )
```

Get current process or thread binding.

The CPU-set `set` (previously allocated by the caller) is filled with the list of PUs which the process or thread (according to *flags*) was last bound to.

Returns

0 on success, -1 on error.

23.10.3.2 hwloc_get_last_cpu_location()

```
int hwloc_get_last_cpu_location (
            hwloc_topology_t topology,
            hwloc_cpuset_t set,
            int flags )
```

Get the last physical CPU where the current process or thread ran.
The CPU-set `set` (previously allocated by the caller) is filled with the list of PUs which the process or thread (according to *flags*) last ran on.
The operating system may move some tasks from one processor to another at any time according to their binding, so this function may return something that is already outdated.
`flags` can include either HWLOC_CPUBIND_PROCESS or HWLOC_CPUBIND_THREAD to specify whether the query should be for the whole process (union of all CPUs on which all threads are running), or only the current thread. If the process is single-threaded, flags can be set to zero to let hwloc use whichever method is available on the underlying OS.

Returns

0 on success, -1 on error.

23.10.3.3 hwloc_get_proc_cpubind()

```
int hwloc_get_proc_cpubind (
            hwloc_topology_t topology,
            hwloc_pid_t pid,
            hwloc_cpuset_t set,
            int flags )
```

Get the current physical binding of process `pid`.
The CPU-set `set` (previously allocated by the caller) is filled with the list of PUs which the process was last bound to.

Returns

0 on success, -1 on error.

Note

`hwloc_pid_t` is `pid_t` on Unix platforms, and `HANDLE` on native Windows platforms.

As a special case on Linux, if a tid (thread ID) is supplied instead of a pid (process ID) and HWLOC_CPUB↩IND_THREAD is passed in flags, the binding for that specific thread is returned.

On non-Linux systems, HWLOC_CPUBIND_THREAD can not be used in `flags`.

23.10.3.4 hwloc_get_proc_last_cpu_location()

```
int hwloc_get_proc_last_cpu_location (
            hwloc_topology_t topology,
            hwloc_pid_t pid,
            hwloc_cpuset_t set,
            int flags )
```

Get the last physical CPU where a process ran.
The CPU-set `set` (previously allocated by the caller) is filled with the list of PUs which the process last ran on.
The operating system may move some tasks from one processor to another at any time according to their binding, so this function may return something that is already outdated.

Returns

0 on success, -1 on error.

Note

`hwloc_pid_t` is `pid_t` on Unix platforms, and `HANDLE` on native Windows platforms.

As a special case on Linux, if a tid (thread ID) is supplied instead of a pid (process ID) and HWLOC_CPUBIND_THREAD is passed in flags, the last CPU location of that specific thread is returned.

On non-Linux systems, HWLOC_CPUBIND_THREAD can not be used in `flags`.

23.10.3.5 hwloc_get_thread_cpubind()

```
int hwloc_get_thread_cpubind (
            hwloc_topology_t topology,
            hwloc_thread_t thread,
            hwloc_cpuset_t set,
            int flags )
```

Get the current physical binding of thread `tid`.
The CPU-set `set` (previously allocated by the caller) is filled with the list of PUs which the thread was last bound to.

Returns

0 on success, -1 on error.

Note

`hwloc_thread_t` is `pthread_t` on Unix platforms, and `HANDLE` on native Windows platforms.

HWLOC_CPUBIND_PROCESS can not be used in `flags`.

23.10.3.6 hwloc_set_cpubind()

```
int hwloc_set_cpubind (
            hwloc_topology_t topology,
            hwloc_const_cpuset_t set,
            int flags )
```

Bind current process or thread on CPUs given in physical bitmap `set`.

Returns

0 on success.

-1 with errno set to `ENOSYS` if the action is not supported.

-1 with errno set to `EXDEV` if the binding cannot be enforced.

23.10.3.7 hwloc_set_proc_cpubind()

```
int hwloc_set_proc_cpubind (
            hwloc_topology_t topology,
            hwloc_pid_t pid,
            hwloc_const_cpuset_t set,
            int flags )
```

Bind a process `pid` on CPUs given in physical bitmap `set`.

Returns

0 on success, -1 on error.

Note

`hwloc_pid_t` is `pid_t` on Unix platforms, and `HANDLE` on native Windows platforms.

As a special case on Linux, if a tid (thread ID) is supplied instead of a pid (process ID) and HWLOC_CPUBIND_THREAD is passed in flags, the binding is applied to that specific thread.

On non-Linux systems, HWLOC_CPUBIND_THREAD can not be used in `flags`.

23.10.3.8 hwloc_set_thread_cpubind()

```
int hwloc_set_thread_cpubind (
            hwloc_topology_t topology,
            hwloc_thread_t thread,
            hwloc_const_cpuset_t set,
            int flags )
```

Bind a thread `thread` on CPUs given in physical bitmap `set`.

Returns

0 on success, -1 on error.

Note

`hwloc_thread_t` is `pthread_t` on Unix platforms, and `HANDLE` on native Windows platforms.

HWLOC_CPUBIND_PROCESS can not be used in `flags`.

23.11 Memory binding

Enumerations

- enum hwloc_membind_policy_t {
  HWLOC_MEMBIND_DEFAULT, HWLOC_MEMBIND_FIRSTTOUCH, HWLOC_MEMBIND_BIND, HWLOC_MEMBIND_INTER
  HWLOC_MEMBIND_WEIGHTED_INTERLEAVE, HWLOC_MEMBIND_NEXTTOUCH, HWLOC_MEMBIND_MIXED
  }
- enum hwloc_membind_flags_t {
  HWLOC_MEMBIND_PROCESS, HWLOC_MEMBIND_THREAD, HWLOC_MEMBIND_STRICT, HWLOC_MEMBIND_MIGRA
  HWLOC_MEMBIND_NOCPUBIND, HWLOC_MEMBIND_BYNODESET }

Functions

- int hwloc_set_membind (hwloc_topology_t topology, hwloc_const_bitmap_t set, hwloc_membind_policy_t policy, int flags)
- int hwloc_get_membind (hwloc_topology_t topology, hwloc_bitmap_t set, hwloc_membind_policy_t *policy, int flags)
- int hwloc_set_proc_membind (hwloc_topology_t topology, hwloc_pid_t pid, hwloc_const_bitmap_t set, hwloc_membind_policy_t policy, int flags)
- int hwloc_get_proc_membind (hwloc_topology_t topology, hwloc_pid_t pid, hwloc_bitmap_t set, hwloc_membind_policy_t *policy, int flags)
- int hwloc_set_area_membind (hwloc_topology_t topology, const void *addr, size_t len, hwloc_const_bitmap_t set, hwloc_membind_policy_t policy, int flags)
- int hwloc_get_area_membind (hwloc_topology_t topology, const void *addr, size_t len, hwloc_bitmap_t set, hwloc_membind_policy_t *policy, int flags)
- int hwloc_get_area_memlocation (hwloc_topology_t topology, const void *addr, size_t len, hwloc_bitmap_t set, int flags)
- void * hwloc_alloc (hwloc_topology_t topology, size_t len)
- void * hwloc_alloc_membind (hwloc_topology_t topology, size_t len, hwloc_const_bitmap_t set, hwloc_membind_policy_t policy, int flags)
- static void * hwloc_alloc_membind_policy (hwloc_topology_t topology, size_t len, hwloc_const_bitmap_t set, hwloc_membind_policy_t policy, int flags)
- int hwloc_free (hwloc_topology_t topology, void *addr, size_t len)

23.11.1 Detailed Description

Memory binding can be done three ways:

- explicit memory allocation thanks to hwloc_alloc_membind() and friends: the binding will have effect on the memory allocated by these functions.
- implicit memory binding through binding policy: hwloc_set_membind() and friends only define the current policy of the process, which will be applied to the subsequent calls to malloc() and friends.
- migration of existing memory ranges, thanks to hwloc_set_area_membind() and friends, which move already-allocated data.

Not all operating systems support all three ways. hwloc_topology_get_support() may be used to query about the actual memory binding support in the currently used operating system.
When the requested binding operation is not available and the HWLOC_MEMBIND_STRICT flag was passed, the function returns -1. `errno` will be set to `ENOSYS` when the system does support the specified action or policy (e.g., some systems only allow binding memory on a per-thread basis, whereas other systems only allow binding memory for all threads in a process). `errno` will be set to `EXDEV` when the requested set can not be enforced (e.g., some systems only allow binding memory to a single NUMA node).
If HWLOC_MEMBIND_STRICT was not passed, the function may fail as well, or the operating system may use a slightly different operation (with side-effects, smaller binding set, etc.) when the requested operation is not exactly supported.

The most portable form that should be preferred over the others whenever possible is as follows. It allocates some memory hopefully bound to the specified set. To do so, hwloc will possibly have to change the current memory binding policy in order to actually get the memory bound, if the OS does not provide any other way to simply allocate bound memory without changing the policy for all allocations. That is the difference with hwloc_alloc_membind(), which will never change the current memory binding policy.

```
hwloc_alloc_membind_policy(topology, size, set,
                           HWLOC_MEMBIND_BIND, 0);
```

Each hwloc memory binding function takes a bitmap argument that is a CPU set by default, or a NUMA memory node set if the flag HWLOC_MEMBIND_BYNODESET is specified. See Object Sets (hwloc_cpuset_t and hwloc_nodeset_t) and The bitmap API for a discussion of CPU sets and NUMA memory node sets. It is also possible to convert between CPU set and node set using hwloc_cpuset_to_nodeset() or hwloc_cpuset_from_nodeset().
Memory binding by CPU set cannot work for CPU-less NUMA memory nodes. Binding by nodeset should therefore be preferred whenever possible.

See also

Some example codes are available under doc/examples/ in the source tree.

Note

On some operating systems, memory binding affects the CPU binding; see HWLOC_MEMBIND_NOCPUBIND

23.11.2 Enumeration Type Documentation

23.11.2.1 hwloc_membind_flags_t

`enum hwloc_membind_flags_t`

Memory binding flags.
These flags can be used to refine the binding policy. All flags can be logically OR'ed together with the exception of HWLOC_MEMBIND_PROCESS and HWLOC_MEMBIND_THREAD; these two flags are mutually exclusive.
Not all systems support all kinds of binding. hwloc_topology_get_support() may be used to query about the actual memory binding support in the currently used operating system. See the "Detailed Description" section of Memory binding for a description of errors that can occur.

Enumerator

HWLOC_MEMBIND_PROCESS	Set policy for all threads of the specified (possibly multithreaded) process. This flag is mutually exclusive with HWLOC_MEMBIND_THREAD.
HWLOC_MEMBIND_THREAD	Set policy for a specific thread of the current process. This flag is mutually exclusive with HWLOC_MEMBIND_PROCESS.
HWLOC_MEMBIND_STRICT	Request strict binding from the OS. The function will fail if the binding can not be guaranteed / completely enforced. This flag has slightly different meanings depending on which function it is used with.
HWLOC_MEMBIND_MIGRATE	Migrate existing allocated memory. If the memory cannot be migrated and the HWLOC_MEMBIND_STRICT flag is passed, an error will be returned.
HWLOC_MEMBIND_NOCPUBIND	Avoid any effect on CPU binding. On some operating systems, some underlying memory binding functions also bind the application to the corresponding CPU(s). Using this flag will cause hwloc to avoid using OS functions that could potentially affect CPU bindings. Note, however, that using NOCPUBIND may reduce hwloc's overall memory binding support. Specifically: some of hwloc's memory binding functions may fail with errno set to `ENOSYS` when used with NOCPUBIND.

Enumerator

HWLOC_MEMBIND_BYNODESET	Consider the bitmap argument as a nodeset. The bitmap argument is considered a nodeset if this flag is given, or a cpuset otherwise by default. Memory binding by CPU set cannot work for CPU-less NUMA memory nodes. Binding by nodeset should therefore be preferred whenever possible.

23.11.2.2 hwloc_membind_policy_t

`enum hwloc_membind_policy_t`

Memory binding policy.

These constants can be used to choose the binding policy. Only one policy can be used at a time (i.e., the values cannot be OR'ed together).

Not all systems support all kinds of binding. hwloc_topology_get_support() may be used to query about the actual memory binding policy support in the currently used operating system. See the "Detailed Description" section of Memory binding for a description of errors that can occur.

Enumerator

HWLOC_MEMBIND_DEFAULT	Reset the memory allocation policy to the system default. Depending on the operating system, this may correspond to HWLOC_MEMBIND_FIRSTTOUCH (Linux, FreeBSD), or HWLOC_MEMBIND_BIND (AIX, HP-UX, Solaris, Windows). This policy is never returned by get membind functions. The nodeset argument is ignored.
HWLOC_MEMBIND_FIRSTTOUCH	Allocate each memory page individually on the local NUMA node of the thread that touches it. The given nodeset should usually be hwloc_topology_get_topology_nodeset() so that the touching thread may run and allocate on any node in the system. On AIX, if the nodeset is smaller, pages are allocated locally (if the local node is in the nodeset) or from a random non-local node (otherwise).
HWLOC_MEMBIND_BIND	Allocate memory on the specified nodes. The actual behavior may slightly vary between operating systems, especially when (some of) the requested nodes are full. On Linux, by default, the MPOL_PREFERRED_MANY (or MPOL_PREFERRED) policy is used. However, if the hwloc strict flag is also given, the Linux MPOL_BIND policy is rather used.
HWLOC_MEMBIND_INTERLEAVE	Allocate memory on the given nodes in an interleaved / round-robin manner. The precise layout of the memory across multiple NUMA nodes is OS/system specific. Interleaving can be useful when threads distributed across the specified NUMA nodes will all be accessing the whole memory range concurrently, since the interleave will then balance the memory references.

Enumerator

HWLOC_MEMBIND_WEIGHTED_INTERLEAVE	Allocate memory on the given nodes in an interleaved / weighted manner. The precise layout of the memory across multiple NUMA nodes is OS/system specific. Weighted interleaving can be useful when threads distributed across the specified NUMA nodes with different bandwidth capabilities will all be accessing the whole memory range concurrently, since the interleave will then balance the memory references.
HWLOC_MEMBIND_NEXTTOUCH	For each page bound with this policy, by next time it is touched (and next time only), it is moved from its current location to the local NUMA node of the thread where the memory reference occurred (if it needs to be moved at all).
HWLOC_MEMBIND_MIXED	Returned by get_membind() functions when multiple threads or parts of a memory area have differing memory binding policies. Also returned when binding is unknown because binding hooks are empty when the topology is loaded from XML without HWLOC_THISSYSTEM=1, etc.

23.11.3 Function Documentation

23.11.3.1 hwloc_alloc()

```
void* hwloc_alloc (
            hwloc_topology_t topology,
            size_t len )
```

Allocate some memory.

This is equivalent to malloc(), except that it tries to allocate page-aligned memory from the OS.

Returns

a pointer to the allocated area, or `NULL` on error.

Note

The allocated memory should be freed with hwloc_free().

23.11.3.2 hwloc_alloc_membind()

```
void* hwloc_alloc_membind (
            hwloc_topology_t topology,
            size_t len,
            hwloc_const_bitmap_t set,
            hwloc_membind_policy_t policy,
            int flags )
```

Allocate some memory on NUMA memory nodes specified by `set`.

Returns

a pointer to the allocated area.

NULL with errno set to `ENOSYS` if the action is not supported and HWLOC_MEMBIND_STRICT is given.

NULL with errno set to `EXDEV` if the binding cannot be enforced and HWLOC_MEMBIND_STRICT is given.

NULL with errno set to `ENOMEM` if the memory allocation failed even before trying to bind.

If HWLOC_MEMBIND_BYNODESET is specified, set is considered a nodeset. Otherwise it's a cpuset.

Note

The allocated memory should be freed with hwloc_free().

23.11.3.3 hwloc_alloc_membind_policy()

```
static void* hwloc_alloc_membind_policy (
            hwloc_topology_t topology,
            size_t len,
            hwloc_const_bitmap_t set,
            hwloc_membind_policy_t policy,
            int flags )  [inline], [static]
```

Allocate some memory on NUMA memory nodes specified by `set`.
First, try to allocate properly with hwloc_alloc_membind(). On failure, the current process or thread memory binding policy is changed with hwloc_set_membind() before allocating memory. Thus this function works in more cases, at the expense of changing the current state (possibly affecting future allocations that would not specify any policy).
If HWLOC_MEMBIND_BYNODESET is specified, set is considered a nodeset. Otherwise it's a cpuset.

Returns

a pointer to the allocated area, or `NULL` on error.

23.11.3.4 hwloc_free()

```
int hwloc_free (
            hwloc_topology_t topology,
            void * addr,
            size_t len )
```

Free memory that was previously allocated by hwloc_alloc() or hwloc_alloc_membind().

Returns

0 on success, -1 on error.

23.11.3.5 hwloc_get_area_membind()

```
int hwloc_get_area_membind (
            hwloc_topology_t topology,
            const void * addr,
            size_t len,
            hwloc_bitmap_t set,
            hwloc_membind_policy_t * policy,
            int flags )
```

Query the CPUs near the physical NUMA node(s) and binding policy of the memory identified by (`addr`, `len`).
The bitmap `set` (previously allocated by the caller) is filled with the memory area binding.
This function has two output parameters: `set` and `policy`. The values returned in these parameters depend on both the `flags` passed in and the memory binding policies and nodesets of the pages in the address range.
If HWLOC_MEMBIND_STRICT is specified, the target pages are first checked to see if they all have the same memory binding policy and nodeset. If they do not, -1 is returned and errno is set to `EXDEV`. If they are identical across all pages, the set and policy are returned in `set` and `policy`, respectively.
If HWLOC_MEMBIND_STRICT is not specified, the union of all NUMA node(s) containing pages in the address range is calculated. If all pages in the target have the same policy, it is returned in `policy`. Otherwise, `policy` is set to HWLOC_MEMBIND_MIXED.
If HWLOC_MEMBIND_BYNODESET is specified, set is considered a nodeset. Otherwise it's a cpuset.
If any other flags are specified, -1 is returned and errno is set to `EINVAL`.

Returns

0 on success.

-1 with errno set to `EINVAL` if `len` is 0.

23.11.3.6 hwloc_get_area_memlocation()

```
int hwloc_get_area_memlocation (
            hwloc_topology_t topology,
            const void * addr,
            size_t len,
            hwloc_bitmap_t set,
            int flags )
```

Get the NUMA nodes where memory identified by (`addr`, `len`) is physically allocated.
The bitmap `set` (previously allocated by the caller) is filled according to the NUMA nodes where the memory area pages are physically allocated. If no page is actually allocated yet, `set` may be empty.
If pages spread to multiple nodes, it is not specified whether they spread equitably, or whether most of them are on a single node, etc.
The operating system may move memory pages from one processor to another at any time according to their binding, so this function may return something that is already outdated.
If HWLOC_MEMBIND_BYNODESET is specified in `flags`, set is considered a nodeset. Otherwise it's a cpuset.
If `len` is 0, `set` is emptied.

Returns

0 on success, -1 on error.

23.11.3.7 hwloc_get_membind()

```
int hwloc_get_membind (
            hwloc_topology_t topology,
            hwloc_bitmap_t set,
            hwloc_membind_policy_t * policy,
            int flags )
```

Query the default memory binding policy and physical locality of the current process or thread.
The bitmap `set` (previously allocated by the caller) is filled with the process or thread memory binding.
This function has two output parameters: `set` and `policy`. The values returned in these parameters depend on both the `flags` passed in and the current memory binding policies and nodesets in the queried target.
Passing the HWLOC_MEMBIND_PROCESS flag specifies that the query target is the current policies and nodesets for all the threads in the current process. Passing HWLOC_MEMBIND_THREAD specifies that the query target is the current policy and nodeset for only the thread invoking this function.
If neither of these flags are passed (which is the most portable method), the process is assumed to be single threaded. This allows hwloc to use either process-based OS functions or thread-based OS functions, depending on which are available.
HWLOC_MEMBIND_STRICT is only meaningful when HWLOC_MEMBIND_PROCESS is also specified. In this case, hwloc will check the default memory policies and nodesets for all threads in the process. If they are not identical, -1 is returned and errno is set to `EXDEV`. If they are identical, the values are returned in `set` and `policy`.
Otherwise, if HWLOC_MEMBIND_PROCESS is specified (and HWLOC_MEMBIND_STRICT is *not* specified), the default set from each thread is logically OR'ed together. If all threads' default policies are the same, `policy` is set to that policy. If they are different, `policy` is set to HWLOC_MEMBIND_MIXED.
In the HWLOC_MEMBIND_THREAD case (or when neither HWLOC_MEMBIND_PROCESS or HWLOC_MEMBIND_THREAD is specified), there is only one set and policy; they are returned in `set` and `policy`, respectively.
If HWLOC_MEMBIND_BYNODESET is specified, set is considered a nodeset. Otherwise it's a cpuset.
If any other flags are specified, -1 is returned and errno is set to `EINVAL`.

Returns

0 on success, -1 on error.

23.11.3.8 hwloc_get_proc_membind()

```
int hwloc_get_proc_membind (
            hwloc_topology_t topology,
            hwloc_pid_t pid,
            hwloc_bitmap_t set,
            hwloc_membind_policy_t * policy,
            int flags )
```

Query the default memory binding policy and physical locality of the specified process.
The bitmap `set` (previously allocated by the caller) is filled with the process memory binding.
This function has two output parameters: `set` and `policy`. The values returned in these parameters depend on both the `flags` passed in and the current memory binding policies and nodesets in the queried target.
Passing the HWLOC_MEMBIND_PROCESS flag specifies that the query target is the current policies and nodesets for all the threads in the specified process. If HWLOC_MEMBIND_PROCESS is not specified (which is the most portable method), the process is assumed to be single threaded. This allows hwloc to use either process-based OS functions or thread-based OS functions, depending on which are available.
Note that it does not make sense to pass HWLOC_MEMBIND_THREAD to this function.
If HWLOC_MEMBIND_STRICT is specified, hwloc will check the default memory policies and nodesets for all threads in the specified process. If they are not identical, -1 is returned and errno is set to `EXDEV`. If they are identical, the values are returned in `set` and `policy`.
Otherwise, `set` is set to the logical OR of all threads' default set. If all threads' default policies are the same, `policy` is set to that policy. If they are different, `policy` is set to HWLOC_MEMBIND_MIXED.
If HWLOC_MEMBIND_BYNODESET is specified, set is considered a nodeset. Otherwise it's a cpuset.
If any other flags are specified, -1 is returned and errno is set to `EINVAL`.

Returns

0 on success, -1 on error.

Note

`hwloc_pid_t` is `pid_t` on Unix platforms, and `HANDLE` on native Windows platforms.

23.11.3.9 hwloc_set_area_membind()

```
int hwloc_set_area_membind (
            hwloc_topology_t topology,
            const void * addr,
            size_t len,
            hwloc_const_bitmap_t set,
            hwloc_membind_policy_t policy,
            int flags )
```

Bind the already-allocated memory identified by (addr, len) to the NUMA node(s) specified by `set`.
If HWLOC_MEMBIND_BYNODESET is specified, set is considered a nodeset. Otherwise it's a cpuset.

Returns

0 on success or if `len` is 0.

-1 with errno set to `ENOSYS` if the action is not supported.

-1 with errno set to `EXDEV` if the binding cannot be enforced.

23.11.3.10 hwloc_set_membind()

```
int hwloc_set_membind (
            hwloc_topology_t topology,
            hwloc_const_bitmap_t set,
```

```
            hwloc_membind_policy_t policy,
            int flags )
```

Set the default memory binding policy of the current process or thread to prefer the NUMA node(s) specified by `set`.
If neither HWLOC_MEMBIND_PROCESS nor HWLOC_MEMBIND_THREAD is specified, the current process is assumed to be single-threaded. This is the most portable form as it permits hwloc to use either process-based OS functions or thread-based OS functions, depending on which are available.
If HWLOC_MEMBIND_BYNODESET is specified, set is considered a nodeset. Otherwise it's a cpuset.

Returns

0 on success.

-1 with errno set to `ENOSYS` if the action is not supported.

-1 with errno set to `EXDEV` if the binding cannot be enforced.

23.11.3.11 hwloc_set_proc_membind()

```
int hwloc_set_proc_membind (
            hwloc_topology_t topology,
            hwloc_pid_t pid,
            hwloc_const_bitmap_t set,
            hwloc_membind_policy_t policy,
            int flags )
```

Set the default memory binding policy of the specified process to prefer the NUMA node(s) specified by `set`.
If HWLOC_MEMBIND_BYNODESET is specified, set is considered a nodeset. Otherwise it's a cpuset.

Returns

0 on success.

-1 with errno set to `ENOSYS` if the action is not supported.

-1 with errno set to `EXDEV` if the binding cannot be enforced.

Note

`hwloc_pid_t` is `pid_t` on Unix platforms, and `HANDLE` on native Windows platforms.

23.12 Changing the Source of Topology Discovery

Enumerations

- enum hwloc_topology_components_flag_e { HWLOC_TOPOLOGY_COMPONENTS_FLAG_BLACKLIST }

Functions

- int hwloc_topology_set_pid (hwloc_topology_t restrict topology, hwloc_pid_t pid)
- int hwloc_topology_set_synthetic (hwloc_topology_t restrict topology, const char *restrict description)
- int hwloc_topology_set_xml (hwloc_topology_t restrict topology, const char *restrict xmlpath)
- int hwloc_topology_set_xmlbuffer (hwloc_topology_t restrict topology, const char *restrict buffer, int size)
- int hwloc_topology_set_components (hwloc_topology_t restrict topology, unsigned long flags, const char *restrict name)

23.12.1 Detailed Description

These functions must be called between hwloc_topology_init() and hwloc_topology_load(). Otherwise, they will return -1 with errno set to `EBUSY`.
If none of the functions below is called, the default is to detect all the objects of the machine that the caller is allowed to access.
This default behavior may also be modified through environment variables if the application did not modify it already. Setting HWLOC_XMLFILE in the environment enforces the discovery from a XML file as if hwloc_topology_set_xml() had been called. Setting HWLOC_SYNTHETIC enforces a synthetic topology as if hwloc_topology_set_synthetic() had been called.
Finally, HWLOC_THISSYSTEM enforces the return value of hwloc_topology_is_thissystem().

23.12.2 Enumeration Type Documentation

23.12.2.1 hwloc_topology_components_flag_e

`enum hwloc_topology_components_flag_e`
Flags to be passed to hwloc_topology_set_components()

Enumerator

HWLOC_TOPOLOGY_COMPONENTS_FLAG_BLACKLIST	Blacklist the target component from being used.

23.12.3 Function Documentation

23.12.3.1 hwloc_topology_set_components()

```
int hwloc_topology_set_components (
            hwloc_topology_t restrict topology,
            unsigned long flags,
            const char *restrict name )
```

Prevent a discovery component from being used for a topology.
`name` is the name of the discovery component that should not be used when loading topology `topology`. The name is a string such as "cuda".
For components with multiple phases, it may also be suffixed with the name of a phase, for instance "linux:io".
`flags` should be HWLOC_TOPOLOGY_COMPONENTS_FLAG_BLACKLIST.
This may be used to avoid expensive parts of the discovery process. For instance, CUDA-specific discovery may be expensive and unneeded while generic I/O discovery could still be useful.

Returns

0 on success.

-1 on error, for instance if flags are invalid.

23.12.3.2 hwloc_topology_set_pid()

```
int hwloc_topology_set_pid (
            hwloc_topology_t restrict topology,
            hwloc_pid_t pid )
```

Change which process the topology is viewed from.
On some systems, processes may have different views of the machine, for instance the set of allowed CPUs. By default, hwloc exposes the view from the current process. Calling hwloc_topology_set_pid() permits to make it expose the topology of the machine from the point of view of another process.

Note

`hwloc_pid_t` is `pid_t` on Unix platforms, and `HANDLE` on native Windows platforms.

-1 is returned and errno is set to `ENOSYS` on platforms that do not support this feature.

The PID will not actually be used until hwloc_topology_load(). If the corresponding process exits in the meantime, hwloc will ignore the PID. If another process reuses the PID, the view of that process will be used.

Returns

0 on success, -1 on error.

23.12.3.3 hwloc_topology_set_synthetic()

```
int hwloc_topology_set_synthetic (
            hwloc_topology_t restrict topology,
            const char *restrict description )
```

Enable synthetic topology.
Gather topology information from the given `description`, a space-separated string of <type:number> describing the object type and arity at each level. All types may be omitted (space-separated string of numbers) so that hwloc chooses all types according to usual topologies. See also the Synthetic topologies.
Setting the environment variable HWLOC_SYNTHETIC may also result in this behavior.
If `description` was properly parsed and describes a valid topology configuration, this function returns 0. Otherwise -1 is returned and errno is set to `EINVAL`.
Note that this function does not actually load topology information; it just tells hwloc where to load it from. You'll still need to invoke hwloc_topology_load() to actually load the topology information.

Returns

0 on success.

-1 with errno set to `EINVAL` if the description was invalid.

Note

For convenience, this backend provides empty binding hooks which just return success.

On success, the synthetic component replaces the previously enabled component (if any), but the topology is not actually modified until hwloc_topology_load().

23.12.3.4 hwloc_topology_set_xml()

```
int hwloc_topology_set_xml (
            hwloc_topology_t restrict topology,
            const char *restrict xmlpath )
```

Enable XML-file based topology.
Gather topology information from the XML file given at `xmlpath`. Setting the environment variable HWLOC_XM↩LFILE may also result in this behavior. This file may have been generated earlier with hwloc_topology_export_xml() in hwloc/export.h, or lstopo file.xml.
Note that this function does not actually load topology information; it just tells hwloc where to load it from. You'll still need to invoke hwloc_topology_load() to actually load the topology information.

Returns

0 on success.

-1 with errno set to `EINVAL` on failure to read the XML file.

Note

See also hwloc_topology_set_userdata_import_callback() for importing application-specific object userdata.

For convenience, this backend provides empty binding hooks which just return success. To have hwloc still actually call OS-specific hooks, the HWLOC_TOPOLOGY_FLAG_IS_THISSYSTEM has to be set to assert that the loaded file is really the underlying system.

On success, the XML component replaces the previously enabled component (if any), but the topology is not actually modified until hwloc_topology_load().

If an invalid XML input file is given, the error may be reported either here or later by hwloc_topology_load() depending on the XML library used by hwloc.

23.12.3.5 hwloc_topology_set_xmlbuffer()

```
int hwloc_topology_set_xmlbuffer (
            hwloc_topology_t restrict topology,
            const char *restrict buffer,
            int size )
```

Enable XML based topology using a memory buffer (instead of a file, as with hwloc_topology_set_xml()).
Gather topology information from the XML memory buffer given at `buffer` and of length `size` (including an ending \0). This buffer may have been filled earlier with hwloc_topology_export_xmlbuffer() in hwloc/export.h.
Note that this function does not actually load topology information; it just tells hwloc where to load it from. You'll still need to invoke hwloc_topology_load() to actually load the topology information.

Returns

0 on success.

-1 with errno set to `EINVAL` on failure to read the XML buffer.

Note

See also hwloc_topology_set_userdata_import_callback() for importing application-specific object userdata.

For convenience, this backend provides empty binding hooks which just return success. To have hwloc still actually call OS-specific hooks, the HWLOC_TOPOLOGY_FLAG_IS_THISSYSTEM has to be set to assert that the loaded file is really the underlying system.

On success, the XML component replaces the previously enabled component (if any), but the topology is not actually modified until hwloc_topology_load().

If an invalid XML input file is given, the error may be reported either here or later by hwloc_topology_load() depending on the XML library used by hwloc.

23.13 Topology Detection Configuration and Query

Data Structures

- struct hwloc_topology_discovery_support
- struct hwloc_topology_cpubind_support
- struct hwloc_topology_membind_support
- struct hwloc_topology_misc_support
- struct hwloc_topology_support

Enumerations

- enum hwloc_topology_flags_e { HWLOC_TOPOLOGY_FLAG_INCLUDE_DISALLOWED, HWLOC_TOPOLOGY_FLAG_IS_THISSYSTEM, HWLOC_TOPOLOGY_FLAG_THISSYSTEM_ALLOWED_RESOURCES, HWLOC_TOPOLOGY_FLAG_IMPORT_SUPPORT = (1UL<<3), HWLOC_TOPOLOGY_FLAG_RESTRICT_TO_CPUBINDING = (1UL<<4), HWLOC_TOPOLOGY_FLAG_RESTRICT_TO_M = (1UL<<5), HWLOC_TOPOLOGY_FLAG_DONT_CHANGE_BINDING = (1UL<<6), HWLOC_TOPOLOGY_FLAG_NO_DIS = (1UL<<7), HWLOC_TOPOLOGY_FLAG_NO_MEMATTRS = (1UL<<8), HWLOC_TOPOLOGY_FLAG_NO_CPUKINDS = (1UL<<9) }
- enum hwloc_type_filter_e { HWLOC_TYPE_FILTER_KEEP_ALL, HWLOC_TYPE_FILTER_KEEP_NONE, HWLOC_TYPE_FILTER_KEEP_STRUCTURE, HWLOC_TYPE_FILTER_KEEP_IMPORTANT }

Functions

- int hwloc_topology_set_flags (hwloc_topology_t topology, unsigned long flags)
- unsigned long hwloc_topology_get_flags (hwloc_topology_t topology)
- int hwloc_topology_is_thissystem (hwloc_topology_t restrict topology)
- const struct hwloc_topology_support * hwloc_topology_get_support (hwloc_topology_t restrict topology)
- int hwloc_topology_set_type_filter (hwloc_topology_t topology, hwloc_obj_type_t type, enum hwloc_type_filter_e filter)
- int hwloc_topology_get_type_filter (hwloc_topology_t topology, hwloc_obj_type_t type, enum hwloc_type_filter_e *filter)
- int hwloc_topology_set_all_types_filter (hwloc_topology_t topology, enum hwloc_type_filter_e filter)
- int hwloc_topology_set_cache_types_filter (hwloc_topology_t topology, enum hwloc_type_filter_e filter)
- int hwloc_topology_set_icache_types_filter (hwloc_topology_t topology, enum hwloc_type_filter_e filter)
- int hwloc_topology_set_io_types_filter (hwloc_topology_t topology, enum hwloc_type_filter_e filter)
- void hwloc_topology_set_userdata (hwloc_topology_t topology, const void *userdata)
- void * hwloc_topology_get_userdata (hwloc_topology_t topology)

23.13.1 Detailed Description

Several functions can optionally be called between hwloc_topology_init() and hwloc_topology_load() to configure how the detection should be performed, e.g. to ignore some objects types, define a synthetic topology, etc.

23.13.2 Enumeration Type Documentation

23.13.2.1 hwloc_topology_flags_e

`enum hwloc_topology_flags_e`

Flags to be set onto a topology context before load.

Flags should be given to hwloc_topology_set_flags(). They may also be returned by hwloc_topology_get_flags().

Enumerator

HWLOC_TOPOLOGY_FLAG_INCLUDE_DISALL↩ OWED	Detect the whole system, ignore reservations, include disallowed objects. Gather all online resources, even if some were disabled by the administrator. For instance, ignore Linux Cgroup/Cpusets and gather all processors and memory nodes. However offline PUs and NUMA nodes are still ignored. When this flag is not set, PUs and NUMA nodes that are disallowed are not added to the topology. Parent objects (package, core, cache, etc.) are added only if some of their children are allowed. All existing PUs and NUMA nodes in the topology are allowed. hwloc_topology_get_allowed_cpuset() and hwloc_topology_get_allowed_nodeset() are equal to the root object cpuset and nodeset. When this flag is set, the actual sets of allowed PUs and NUMA nodes are given by hwloc_topology_get_allowed_cpuset() and hwloc_topology_get_allowed_nodeset(). They may be smaller than the root object cpuset and nodeset. If the current topology is exported to XML and reimported later, this flag should be set again in the reimported topology so that disallowed resources are reimported as well.
HWLOC_TOPOLOGY_FLAG_IS_THISSYSTEM	Assume that the selected backend provides the topology for the system on which we are running. This forces hwloc_topology_is_thissystem() to return 1, i.e. makes hwloc assume that the selected backend provides the topology for the system on which we are running, even if it is not the OS-specific backend but the XML backend for instance. This means making the binding functions actually call the OS-specific system calls and really do binding, while the XML backend would otherwise provide empty hooks just returning success. Setting the environment variable HWLOC_THISSYSTEM may also result in the same behavior. This can be used for efficiency reasons to first detect the topology once, save it to an XML file, and quickly reload it later through the XML backend, but still having binding functions actually do bind.

Enumerator

HWLOC_TOPOLOGY_FLAG_THISSYSTEM_ALL↩ OWED_RESOURCES	Get the set of allowed resources from the local operating system even if the topology was loaded from XML or synthetic description. If the topology was loaded from XML or from a synthetic string, restrict it by applying the current process restrictions such as Linux Cgroup/Cpuset. This is useful when the topology is not loaded directly from the local machine (e.g. for performance reason) and it comes with all resources, while the running process is restricted to only parts of the machine. This flag is ignored unless HWLOC_TOPOLOGY_FLAG_IS_THISSYSTEM is also set since the loaded topology must match the underlying machine where restrictions will be gathered from. Setting the environment variable HWLOC_THISSYSTEM_ALLOWED_RESOURCES would result in the same behavior.
HWLOC_TOPOLOGY_FLAG_IMPORT_SUPPORT	Import support from the imported topology. When importing a XML topology from a remote machine, binding is disabled by default (see HWLOC_TOPOLOGY_FLAG_IS_THISSYSTEM). This disabling is also marked by putting zeroes in the corresponding supported feature bits reported by hwloc_topology_get_support(). The flag HWLOC_TOPOLOGY_FLAG_IMPORT_SUPPORT actually imports support bits from the remote machine. It also sets the flag `imported_support` in the struct hwloc_topology_misc_support array. If the imported XML did not contain any support information (exporter hwloc is too old), this flag is not set. Note that these supported features are only relevant for the hwloc installation that actually exported the XML topology (it may vary with the operating system, or with how hwloc was compiled). Note that setting this flag however does not enable binding for the locally imported hwloc topology, it only reports what the remote hwloc and machine support.

Enumerator

HWLOC_TOPOLOGY_FLAG_RESTRICT_TO_CPUBINDING	Do not consider resources outside of the process CPU binding. If the binding of the process is limited to a subset of cores, ignore the other cores during discovery. The resulting topology is identical to what a call to hwloc_topology_restrict() would generate, but this flag also prevents hwloc from ever touching other resources during the discovery. This flag especially tells the x86 backend to never temporarily rebind a thread on any excluded core. This is useful on Windows because such temporary rebinding can change the process binding. Another use-case is to avoid cores that would not be able to perform the hwloc discovery anytime soon because they are busy executing some high-priority real-time tasks. If process CPU binding is not supported, the thread CPU binding is considered instead if supported, or the flag is ignored. This flag requires HWLOC_TOPOLOGY_FLAG_IS_THISSYSTEM as well since binding support is required.
HWLOC_TOPOLOGY_FLAG_RESTRICT_TO_MEMBINDING	Do not consider resources outside of the process memory binding. If the binding of the process is limited to a subset of NUMA nodes, ignore the other NUMA nodes during discovery. The resulting topology is identical to what a call to hwloc_topology_restrict() would generate, but this flag also prevents hwloc from ever touching other resources during the discovery. This flag is meant to be used together with HWLOC_TOPOLOGY_FLAG_RESTRICT_TO_CPUBINDING when both cores and NUMA nodes should be ignored outside of the process binding. If process memory binding is not supported, the thread memory binding is considered instead if supported, or the flag is ignored. This flag requires HWLOC_TOPOLOGY_FLAG_IS_THISSYSTEM as well since binding support is required.
HWLOC_TOPOLOGY_FLAG_DONT_CHANGE_BINDING	Do not ever modify the process or thread binding during discovery. This flag disables all hwloc discovery steps that require a change of the process or thread binding. This currently only affects the x86 backend which gets entirely disabled. This is useful when hwloc_topology_load() is called while the application also creates additional threads or modifies the binding. This flag is also a strict way to make sure the process binding will not change to due thread binding changes on Windows (see HWLOC_TOPOLOGY_FLAG_RESTRICT_TO_CPUBINDING).
HWLOC_TOPOLOGY_FLAG_NO_DISTANCES	Ignore distances. Ignore distance information from the operating systems (and from XML) and hence do not use distances for grouping.

Enumerator

HWLOC_TOPOLOGY_FLAG_NO_MEMATTRS	Ignore memory attributes and tiers. Ignore memory attribues from the operating systems (and from XML) Hence also do not try to build memory tiers.
HWLOC_TOPOLOGY_FLAG_NO_CPUKINDS	Ignore CPU Kinds. Ignore CPU kind information from the operating systems (and from XML).

23.13.2.2 hwloc_type_filter_e

`enum hwloc_type_filter_e`

Type filtering flags.

By default, most objects are kept (HWLOC_TYPE_FILTER_KEEP_ALL). Instruction caches, memory-side caches, I/O and Misc objects are ignored by default (HWLOC_TYPE_FILTER_KEEP_NONE). Group levels are ignored unless they bring structure (HWLOC_TYPE_FILTER_KEEP_STRUCTURE).

Note that group objects are also ignored individually (without the entire level) when they do not bring structure.

Enumerator

HWLOC_TYPE_FILTER_KEEP_ALL	Keep all objects of this type. Cannot be set for HWLOC_OBJ_GROUP (groups are designed only to add more structure to the topology).
HWLOC_TYPE_FILTER_KEEP_NONE	Ignore all objects of this type. The bottom-level type HWLOC_OBJ_PU, the HWLOC_OBJ_NUMANODE type, and the top-level type HWLOC_OBJ_MACHINE may not be ignored.
HWLOC_TYPE_FILTER_KEEP_STRUCTURE	Only ignore objects if their entire level does not bring any structure. Keep the entire level of objects if at least one of these objects adds structure to the topology. An object brings structure when it has multiple children and it is not the only child of its parent. If all objects in the level are the only child of their parent, and if none of them has multiple children, the entire level is removed. Cannot be set for I/O and Misc objects since the topology structure does not matter there.
HWLOC_TYPE_FILTER_KEEP_IMPORTANT	Only keep likely-important objects of the given type. It is only useful for I/O object types. For HWLOC_OBJ_PCI_DEVICE and HWLOC_OBJ_OS_DEVICE, it means that only objects of major/common kinds are kept (storage, network, OpenFabrics, CUDA, OpenCL, RSMI, NVML, and displays). Also, only OS devices directly attached on PCI (e.g. no USB) are reported. For HWLOC_OBJ_BRIDGE, it means that bridges are kept only if they have children. This flag equivalent to HWLOC_TYPE_FILTER_KEEP_ALL for Normal, Memory and Misc types since they are likely important.

23.13.3 Function Documentation

23.13.3.1 hwloc_topology_get_flags()

```
unsigned long hwloc_topology_get_flags (
            hwloc_topology_t topology )
```

Get OR'ed flags of a topology.
Get the OR'ed set of hwloc_topology_flags_e of a topology.
If hwloc_topology_set_flags() was not called earlier, no flags are set (`0` is returned).

Returns

the flags previously set with hwloc_topology_set_flags().

Note

This function may also be called after hwloc_topology_load().

23.13.3.2 hwloc_topology_get_support()

```
const struct hwloc_topology_support* hwloc_topology_get_support (
            hwloc_topology_t restrict topology )
```

Retrieve the topology support.
Each flag indicates whether a feature is supported. If set to 0, the feature is not supported. If set to 1, the feature is supported, but the corresponding call may still fail in some corner cases.
These features are also listed by hwloc-info --support
The reported features are what the current topology supports on the current machine. If the topology was exported to XML from another machine and later imported here, support still describes what is supported for this imported topology after import. By default, binding will be reported as unsupported in this case (see HWLOC_TOPOLOGY_FLAG_IS_THISSYSTEM).
Topology flag HWLOC_TOPOLOGY_FLAG_IMPORT_SUPPORT may be used to report the supported features of the original remote machine instead. If it was successfully imported, `imported_support` will be set in the struct hwloc_topology_misc_support array.

Returns

A pointer to a support structure.

Note

The function cannot return `NULL`.

The returned pointer should not be freed, it belongs to the hwloc library.

This function may be called before or after hwloc_topology_load() but the support structure only contains valid information after.

23.13.3.3 hwloc_topology_get_type_filter()

```
int hwloc_topology_get_type_filter (
            hwloc_topology_t topology,
            hwloc_obj_type_t type,
            enum hwloc_type_filter_e * filter )
```

Get the current filtering for the given object type.

Returns

0 on success, -1 on error.

23.13.3.4 hwloc_topology_get_userdata()

```
void* hwloc_topology_get_userdata (
            hwloc_topology_t topology )
```

Retrieve the topology-specific userdata pointer.
Retrieve the application-given private data pointer that was previously set with hwloc_topology_set_userdata().

Returns

A pointer to the private-data if any.

`NULL` if no private-data was previoulsy set.

23.13.3.5 hwloc_topology_is_thissystem()

```
int hwloc_topology_is_thissystem (
            hwloc_topology_t restrict topology )
```

Does the topology context come from this system?

Returns

1 if this topology context was built using the system running this program.

0 instead (for instance if using another file-system root, a XML topology file, or a synthetic topology).

Note

This function may also be called after hwloc_topology_load().

23.13.3.6 hwloc_topology_set_all_types_filter()

```
int hwloc_topology_set_all_types_filter (
            hwloc_topology_t topology,
            enum hwloc_type_filter_e filter )
```

Set the filtering for all object types.
If some types do not support this filtering, they are silently ignored.

Returns

0 on success, -1 on error.

23.13.3.7 hwloc_topology_set_cache_types_filter()

```
int hwloc_topology_set_cache_types_filter (
            hwloc_topology_t topology,
            enum hwloc_type_filter_e filter )
```

Set the filtering for all CPU cache object types.
Memory-side caches are not involved since they are not CPU caches.

Returns

0 on success, -1 on error.

23.13.3.8 hwloc_topology_set_flags()

```
int hwloc_topology_set_flags (
            hwloc_topology_t topology,
            unsigned long flags )
```

Set OR'ed flags to non-yet-loaded topology.
Set a OR'ed set of hwloc_topology_flags_e onto a topology that was not yet loaded.
If this function is called multiple times, the last invocation will erase and replace the set of flags that was previously set.
By default, no flags are set (0).
The flags set in a topology may be retrieved with hwloc_topology_get_flags().

Returns

0 on success.

-1 on error, for instance if flags are invalid.

23.13.3.9 hwloc_topology_set_icache_types_filter()

```
int hwloc_topology_set_icache_types_filter (
            hwloc_topology_t topology,
            enum hwloc_type_filter_e filter )
```

Set the filtering for all CPU instruction cache object types.
Memory-side caches are not involved since they are not CPU caches.

Returns

0 on success, -1 on error.

23.13.3.10 hwloc_topology_set_io_types_filter()

```
int hwloc_topology_set_io_types_filter (
            hwloc_topology_t topology,
            enum hwloc_type_filter_e filter )
```

Set the filtering for all I/O object types.

Returns

0 on success, -1 on error.

23.13.3.11 hwloc_topology_set_type_filter()

```
int hwloc_topology_set_type_filter (
            hwloc_topology_t topology,
            hwloc_obj_type_t type,
            enum hwloc_type_filter_e filter )
```

Set the filtering for the given object type.

Returns

0 on success, -1 on error.

23.13.3.12 hwloc_topology_set_userdata()

```
void hwloc_topology_set_userdata (
            hwloc_topology_t topology,
            const void * userdata )
```

Set the topology-specific userdata pointer.

Each topology may store one application-given private data pointer. It is initialized to `NULL`. hwloc will never modify it.

Use it as you wish, after hwloc_topology_init() and until hwloc_topolog_destroy().

This pointer is not exported to XML.

23.14 Modifying a loaded Topology

Enumerations

- enum hwloc_restrict_flags_e { HWLOC_RESTRICT_FLAG_REMOVE_CPULESS, HWLOC_RESTRICT_FLAG_BYNODESET = (1UL<<3), HWLOC_RESTRICT_FLAG_REMOVE_MEMLESS, HWLOC_RESTRICT_FLAG_ADAPT_MISC, HWLOC_RESTRICT_FLAG_ADAPT_IO }
- enum hwloc_allow_flags_e { HWLOC_ALLOW_FLAG_ALL, HWLOC_ALLOW_FLAG_LOCAL_RESTRICTIONS, HWLOC_ALLOW_FLAG_CUSTOM }

Functions

- int hwloc_topology_restrict (hwloc_topology_t restrict topology, hwloc_const_bitmap_t set, unsigned long flags)
- int hwloc_topology_allow (hwloc_topology_t restrict topology, hwloc_const_cpuset_t cpuset, hwloc_const_nodeset_t nodeset, unsigned long flags)
- hwloc_obj_t hwloc_topology_insert_misc_object (hwloc_topology_t topology, hwloc_obj_t parent, const char *name)
- hwloc_obj_t hwloc_topology_alloc_group_object (hwloc_topology_t topology)
- int hwloc_topology_free_group_object (hwloc_topology_t topology, hwloc_obj_t group)
- hwloc_obj_t hwloc_topology_insert_group_object (hwloc_topology_t topology, hwloc_obj_t group)
- int hwloc_obj_add_other_obj_sets (hwloc_obj_t dst, hwloc_obj_t src)
- int hwloc_topology_refresh (hwloc_topology_t topology)

23.14.1 Detailed Description

23.14.2 Enumeration Type Documentation

23.14.2.1 hwloc_allow_flags_e

`enum hwloc_allow_flags_e`

Flags to be given to hwloc_topology_allow().

Enumerator

HWLOC_ALLOW_FLAG_ALL	Mark all objects as allowed in the topology. `cpuset` and `nodeset` given to hwloc_topology_allow() must be `NULL`.
HWLOC_ALLOW_FLAG_LOCAL_RESTRICTIONS	Only allow objects that are available to the current process. The topology must have HWLOC_TOPOLOGY_FLAG_IS_THISSYSTEM so that the set of available resources can actually be retrieved from the operating system. `cpuset` and `nodeset` given to hwloc_topology_allow() must be `NULL`.
HWLOC_ALLOW_FLAG_CUSTOM	Allow a custom set of objects, given to hwloc_topology_allow() as `cpuset` and/or `nodeset` parameters.

23.14.2.2 hwloc_restrict_flags_e

`enum hwloc_restrict_flags_e`

Flags to be given to hwloc_topology_restrict().

Enumerator

HWLOC_RESTRICT_FLAG_REMOVE_CPULESS	Remove all objects that became CPU-less. By default, only objects that contain no PU and no memory are removed. This flag may not be used with HWLOC_RESTRICT_FLAG_BYNODESET.
HWLOC_RESTRICT_FLAG_BYNODESET	Restrict by nodeset instead of CPU set. Only keep objects whose nodeset is included or partially included in the given set. This flag may not be used with HWLOC_RESTRICT_FLAG_REMOVE_CPULESS.
HWLOC_RESTRICT_FLAG_REMOVE_MEMLESS	Remove all objects that became Memory-less. By default, only objects that contain no PU and no memory are removed. This flag may only be used with HWLOC_RESTRICT_FLAG_BYNODESET.
HWLOC_RESTRICT_FLAG_ADAPT_MISC	Move Misc objects to ancestors if their parents are removed during restriction. If this flag is not set, Misc objects are removed when their parents are removed.
HWLOC_RESTRICT_FLAG_ADAPT_IO	Move I/O objects to ancestors if their parents are removed during restriction. If this flag is not set, I/O devices and bridges are removed when their parents are removed.

23.14.3 Function Documentation

23.14.3.1 hwloc_obj_add_other_obj_sets()

```
int hwloc_obj_add_other_obj_sets (
            hwloc_obj_t dst,
            hwloc_obj_t src )
```

Setup object cpusets/nodesets by OR'ing another object's sets.
For each defined cpuset or nodeset in `src`, allocate the corresponding set in `dst` and add `src` to it by OR'ing sets.
This function is convenient between hwloc_topology_alloc_group_object() and hwloc_topology_insert_group_object().
It builds the sets of the new Group that will be inserted as a new intermediate parent of several objects.

Returns

0 on success.

-1 with errno set to `ENOMEM` if some internal reallocation failed.

23.14.3.2 hwloc_topology_alloc_group_object()

```
hwloc_obj_t hwloc_topology_alloc_group_object (
            hwloc_topology_t topology )
```

Allocate a Group object to insert later with hwloc_topology_insert_group_object().
This function returns a new Group object.
The caller should (at least) initialize its sets before inserting the object in the topology, see hwloc_topology_insert_group_object().
Or it may decide not to insert and just free the group object by calling hwloc_topology_free_group_object().

Returns

The allocated object on success.

`NULL` on error.

Note

If successfully inserted by hwloc_topology_insert_group_object(), the object will be freed when the entire topology is freed. If insertion failed (e.g. NULL or empty CPU and node-sets), it is freed before returning the error.

23.14.3.3 hwloc_topology_allow()

```
int hwloc_topology_allow (
            hwloc_topology_t restrict topology,
            hwloc_const_cpuset_t cpuset,
            hwloc_const_nodeset_t nodeset,
            unsigned long flags )
```

Change the sets of allowed PUs and NUMA nodes in the topology.
This function only works if the HWLOC_TOPOLOGY_FLAG_INCLUDE_DISALLOWED was set on the topology.
It does not modify any object, it only changes the sets returned by hwloc_topology_get_allowed_cpuset() and hwloc_topology_get_allowed_nodeset().
It is notably useful when importing a topology from another process running in a different Linux Cgroup.
flags must be set to one flag among hwloc_allow_flags_e.

Returns

0 on success, -1 on error.

Note

This function is allowed on an adopted topology (see Sharing topologies between processes). The flag HWLOC_TOPOLOGY_FLAG_INCLUDE_DISALLOWED is required on the original topology (before sharing).

Removing objects from a topology should rather be performed with hwloc_topology_restrict().

23.14.3.4 hwloc_topology_free_group_object()

```
int hwloc_topology_free_group_object (
            hwloc_topology_t topology,
            hwloc_obj_t group )
```

Free a group object allocated with hwloc_topology_alloc_group_object().
This function is only useful if the group object was not given to hwloc_topology_insert_group_object() as planned.

Note

topology must be the same as the one previously passed to hwloc_topology_alloc_group_object().

Returns

0 on success.

-1 on error, for instance if an invalid topology is given.

23.14.3.5 hwloc_topology_insert_group_object()

```
hwloc_obj_t hwloc_topology_insert_group_object (
            hwloc_topology_t topology,
            hwloc_obj_t group )
```

Add more structure to the topology by adding an intermediate Group.
The caller should first allocate a new Group object with hwloc_topology_alloc_group_object(). Then it must setup at least one of its CPU or node sets to specify the final location of the Group in the topology. Then the object can be passed to this function for actual insertion in the topology.

The main use case for this function is to group a subset of siblings among the list of children below a single parent. For instance, if grouping 4 cores out of a 8-core socket, the logical list of cores will be reordered so that the 4 grouped ones are consecutive. Then, if needed, a new depth is added between the parent and those children, and the Group is inserted there. At the end, the 4 grouped cores are now children of the Group, which replaces them as a child of the original parent.
In practice, the grouped objects are specified through cpusets and/or nodesets, for instance using hwloc_obj_add_other_obj_sets() iteratively. Hence it is possible to group objects that are not children of the same parent, for instance some PUs below the 4 cores in example above. However this general case may fail if the expected Group conflicts with the existing hierarchy. For instance if each core has two PUs, it is not possible to insert a Group containing a single PU of each core.
To specify the objects to group, either the cpuset or nodeset field (or both, if compatible) must be set to a non-empty bitmap. The complete_cpuset or complete_nodeset may be set instead if inserting with respect to the complete topology (including disallowed, offline or unknown objects). These sets cannot be larger than the current topology, or they would get restricted silently. The core will setup the other sets after actual insertion.
The `subtype` object attribute may be defined with hwloc_obj_set_subtype() to display something else than "Group" as the type name for this object in lstopo. Custom name-value info pairs may be added with hwloc_obj_add_info() after insertion.
The group `dont_merge` attribute may be set to `1` to prevent the hwloc core from ever merging this object with another hierarchically-identical object. This is useful when the Group itself describes an important feature that cannot be exposed anywhere else in the hierarchy.
The group `kind` attribute may be set to a high value such as `0xffffffff` to tell hwloc that this new Group should always be discarded in favor of any existing Group with the same locality.

Note

Inserting a group adds some locality information to the topology, hence the existing objects may get reordered (including PUs and NUMA nodes), and their logical indexes may change.

If the insertion fails, the input group object is freed.

If the group object should be discarded instead of inserted, it may be passed to hwloc_topology_free_group_object() instead.

`topology` must be the same as the one previously passed to hwloc_topology_alloc_group_object().

Returns

The inserted object if it was properly inserted.

An existing object if the Group was merged or discarded because the topology already contained an object at the same location (the Group did not add any hierarchy information).

`NULL` if the insertion failed because of conflicting sets in topology tree.

`NULL` if Group objects are filtered-out of the topology (HWLOC_TYPE_FILTER_KEEP_NONE).

`NULL` if the object was discarded because no set was initialized in the Group before insert, or all of them were empty.

23.14.3.6 hwloc_topology_insert_misc_object()

```
hwloc_obj_t hwloc_topology_insert_misc_object (
            hwloc_topology_t topology,
            hwloc_obj_t parent,
            const char * name )
```

Add a MISC object as a leaf of the topology.
A new MISC object will be created and inserted into the topology at the position given by parent. It is appended to the list of existing Misc children, without ever adding any intermediate hierarchy level. This is useful for annotating the topology without actually changing the hierarchy.
`name` is supposed to be unique across all Misc objects in the topology. It will be duplicated to setup the new object attributes.
The new leaf object will not have any `cpuset`.
The `subtype` object attribute may be defined with hwloc_obj_set_subtype() after successful insertion.

Returns

the newly-created object

NULL on error.

NULL if Misc objects are filtered-out of the topology (HWLOC_TYPE_FILTER_KEEP_NONE).

Note

If name contains some non-printable characters, they will be dropped when exporting to XML, see hwloc_topology_export_xml() in hwloc/export.h.

23.14.3.7 hwloc_topology_refresh()

```
int hwloc_topology_refresh (
            hwloc_topology_t topology )
```

Refresh internal structures after topology modification.
Modifying the topology (by restricting, adding objects, modifying structures such as distances or memory attributes, etc.) may cause some internal caches to become invalid. These caches are automatically refreshed when accessed but this refreshing is not thread-safe.
This function is not thread-safe either, but it is a good way to end a non-thread-safe phase of topology modification. Once this refresh is done, multiple threads may concurrently consult the topology, objects, distances, attributes, etc.
See also Thread Safety

Returns

0 on success.

-1 on error, for instance if some internal reallocation failed.

23.14.3.8 hwloc_topology_restrict()

```
int hwloc_topology_restrict (
            hwloc_topology_t restrict topology,
            hwloc_const_bitmap_t set,
            unsigned long flags )
```

Restrict the topology to the given CPU set or nodeset.
Topology topology is modified so as to remove all objects that are not included (or partially included) in the CPU set set. All objects CPU and node sets are restricted accordingly.
By default, set is a CPU set. It means that the set of PUs in the topology is restricted. Once some PUs got removed, their parents may also get removed recursively if they became child-less.
If HWLOC_RESTRICT_FLAG_BYNODESET is passed in flags, set is considered a nodeset instead of a CPU set. It means that the set of NUMA nodes in the topology is restricted (instead of PUs). Once some NUMA nodes got removed, their parents may also get removed recursively if they became child-less.
flags is a OR'ed set of hwloc_restrict_flags_e.

Note

Restricting the topology removes some locality information, hence the remaining objects may get reordered (including PUs and NUMA nodes), and their logical indexes may change.

This call may not be reverted by restricting back to a larger set. Once dropped during restriction, objects may not be brought back, except by loading another topology with hwloc_topology_load().

Returns

0 on success.

-1 with errno set to EINVAL if the input set is invalid. The topology is not modified in this case.

-1 with errno set to ENOMEM on failure to allocate internal data. The topology is reinitialized in this case. It should be either destroyed with hwloc_topology_destroy() or configured and loaded again.

23.15 Kinds of object Type

Functions

- int hwloc_obj_type_is_normal (hwloc_obj_type_t type)
- int hwloc_obj_type_is_io (hwloc_obj_type_t type)
- int hwloc_obj_type_is_memory (hwloc_obj_type_t type)
- int hwloc_obj_type_is_cache (hwloc_obj_type_t type)
- int hwloc_obj_type_is_dcache (hwloc_obj_type_t type)
- int hwloc_obj_type_is_icache (hwloc_obj_type_t type)

23.15.1 Detailed Description

Each object type is either Normal (i.e. hwloc_obj_type_is_normal() returns 1), or Memory (i.e. hwloc_obj_type_is_memory() returns 1) or I/O (i.e. hwloc_obj_type_is_io() returns 1) or Misc (i.e. equal to HWLOC_OBJ_MISC). It cannot be of more than one of these kinds.
See also Object Kind in Terms and Definitions.

23.15.2 Function Documentation

23.15.2.1 hwloc_obj_type_is_cache()

```
int hwloc_obj_type_is_cache (
            hwloc_obj_type_t type )
```

Check whether an object type is a CPU Cache (Data, Unified or Instruction).
Memory-side caches are not CPU caches.

Returns

1 if an object of type `type` is a Cache, 0 otherwise.

23.15.2.2 hwloc_obj_type_is_dcache()

```
int hwloc_obj_type_is_dcache (
            hwloc_obj_type_t type )
```

Check whether an object type is a CPU Data or Unified Cache.
Memory-side caches are not CPU caches.

Returns

1 if an object of type `type` is a CPU Data or Unified Cache, 0 otherwise.

23.15.2.3 hwloc_obj_type_is_icache()

```
int hwloc_obj_type_is_icache (
            hwloc_obj_type_t type )
```

Check whether an object type is a CPU Instruction Cache,.
Memory-side caches are not CPU caches.

Returns

1 if an object of type `type` is a CPU Instruction Cache, 0 otherwise.

23.15.2.4 hwloc_obj_type_is_io()

```
int hwloc_obj_type_is_io (
            hwloc_obj_type_t type )
```

Check whether an object type is I/O.
I/O objects are objects attached to their parents in the I/O children list. This current includes Bridges, PCI and OS devices.

Returns

1 if an object of type `type` is a I/O object, 0 otherwise.

23.15.2.5 hwloc_obj_type_is_memory()

```
int hwloc_obj_type_is_memory (
            hwloc_obj_type_t type )
```

Check whether an object type is Memory.
Memory objects are objects attached to their parents in the Memory children list. This current includes NUMA nodes and Memory-side caches.

Returns

1 if an object of type `type` is a Memory object, 0 otherwise.

23.15.2.6 hwloc_obj_type_is_normal()

```
int hwloc_obj_type_is_normal (
            hwloc_obj_type_t type )
```

Check whether an object type is Normal.
Normal objects are objects of the main CPU hierarchy (Machine, Package, Core, PU, CPU caches, etc.), but they are not NUMA nodes, I/O devices or Misc objects.
They are attached to parent as Normal children, not as Memory, I/O or Misc children.

Returns

1 if an object of type `type` is a Normal object, 0 otherwise.

23.16 Finding Objects inside a CPU set

Functions

- static hwloc_obj_t hwloc_get_first_largest_obj_inside_cpuset (hwloc_topology_t topology, hwloc_const_cpuset_t set)
- int hwloc_get_largest_objs_inside_cpuset (hwloc_topology_t topology, hwloc_const_cpuset_t set, hwloc_obj_t *restrict objs, int max)
- static hwloc_obj_t hwloc_get_next_obj_inside_cpuset_by_depth (hwloc_topology_t topology, hwloc_const_cpuset_t set, int depth, hwloc_obj_t prev)
- static hwloc_obj_t hwloc_get_next_obj_inside_cpuset_by_type (hwloc_topology_t topology, hwloc_const_cpuset_t set, hwloc_obj_type_t type, hwloc_obj_t prev)
- static hwloc_obj_t hwloc_get_obj_inside_cpuset_by_depth (hwloc_topology_t topology, hwloc_const_cpuset_t set, int depth, unsigned idx)
- static hwloc_obj_t hwloc_get_obj_inside_cpuset_by_type (hwloc_topology_t topology, hwloc_const_cpuset_t set, hwloc_obj_type_t type, unsigned idx)
- static unsigned hwloc_get_nbobjs_inside_cpuset_by_depth (hwloc_topology_t topology, hwloc_const_cpuset_t set, int depth)
- static int hwloc_get_nbobjs_inside_cpuset_by_type (hwloc_topology_t topology, hwloc_const_cpuset_t set, hwloc_obj_type_t type)
- static int hwloc_get_obj_index_inside_cpuset (hwloc_topology_t topology, hwloc_const_cpuset_t set, hwloc_obj_t obj)

23.16.1 Detailed Description

23.16.2 Function Documentation

23.16.2.1 hwloc_get_first_largest_obj_inside_cpuset()

```
static hwloc_obj_t hwloc_get_first_largest_obj_inside_cpuset (
            hwloc_topology_t topology,
            hwloc_const_cpuset_t set )  [inline], [static]
```

Get the first largest object included in the given cpuset `set`.

Returns

the first object that is included in `set` and whose parent is not.

`NULL` if no such object exists.

This is convenient for iterating over all largest objects within a CPU set by doing a loop getting the first largest object and clearing its CPU set from the remaining CPU set.

23.16.2.2 hwloc_get_largest_objs_inside_cpuset()

```
int hwloc_get_largest_objs_inside_cpuset (
            hwloc_topology_t topology,
            hwloc_const_cpuset_t set,
            hwloc_obj_t *restrict objs,
            int max )
```

Get the set of largest objects covering exactly a given cpuset `set`.

Returns

the number of objects returned in `objs`.

-1 if no set of objects may cover that cpuset.

23.16.2.3 hwloc_get_nbobjs_inside_cpuset_by_depth()

```
static unsigned hwloc_get_nbobjs_inside_cpuset_by_depth (
            hwloc_topology_t topology,
            hwloc_const_cpuset_t set,
            int depth )  [inline], [static]
```

Return the number of objects at depth `depth` included in CPU set `set`.

Returns

the number of objects.

0 if the depth is invalid.

Note

Objects with empty CPU sets are ignored (otherwise they would be considered included in any given set).

This function cannot work if objects at the given depth do not have CPU sets (I/O or Misc objects).

23.16.2.4 hwloc_get_nbobjs_inside_cpuset_by_type()

```
static int hwloc_get_nbobjs_inside_cpuset_by_type (
            hwloc_topology_t topology,
            hwloc_const_cpuset_t set,
            hwloc_obj_type_t type )  [inline], [static]
```

Return the number of objects of type `type` included in CPU set `set`.

Returns

the number of objects.

0 if there are no objects of that type in the topology.

-1 if there are multiple levels of objects of that type, the caller should fallback to hwloc_get_nbobjs_inside_cpuset_by_depth().

Note

Objects with empty CPU sets are ignored (otherwise they would be considered included in any given set).

This function cannot work if objects of the given type do not have CPU sets (I/O objects).

23.16.2.5 hwloc_get_next_obj_inside_cpuset_by_depth()

```
static hwloc_obj_t hwloc_get_next_obj_inside_cpuset_by_depth (
            hwloc_topology_t topology,
            hwloc_const_cpuset_t set,
            int depth,
            hwloc_obj_t prev )  [inline], [static]
```

Return the next object at depth `depth` included in CPU set `set`.
The next invokation should pass the previous return value in `prev` so as to obtain the next object in `set`.

Returns

the first object at depth `depth` included in `set` if `prev` is `NULL`.

the next object at depth `depth` included in `set` if `prev` is not `NULL`.

`NULL` if there is no next object.

Note

Objects with empty CPU sets are ignored (otherwise they would be considered included in any given set).

This function cannot work if objects at the given depth do not have CPU sets (I/O or Misc objects).

23.16.2.6 hwloc_get_next_obj_inside_cpuset_by_type()

```
static hwloc_obj_t hwloc_get_next_obj_inside_cpuset_by_type (
            hwloc_topology_t topology,
            hwloc_const_cpuset_t set,
            hwloc_obj_type_t type,
            hwloc_obj_t prev ) [inline], [static]
```

Return the next object of type `type` included in CPU set `set`.
The next invokation should pass the previous return value in `prev` so as to obtain the next object in `set`.

Returns

the first object of type `type` included in `set` if `prev` is `NULL`.

the next object of type `type` included in `set` if `prev` is not `NULL`.

`NULL` if there is no next object.

`NULL` if there is no depth for the given type.

`NULL` if there are multiple depths for the given type, the caller should fallback to hwloc_get_next_obj_inside_cpuset_by_depth().

Note

Objects with empty CPU sets are ignored (otherwise they would be considered included in any given set).

This function cannot work if objects of the given type do not have CPU sets (I/O or Misc objects).

23.16.2.7 hwloc_get_obj_index_inside_cpuset()

```
static int hwloc_get_obj_index_inside_cpuset (
            hwloc_topology_t topology,
            hwloc_const_cpuset_t set,
            hwloc_obj_t obj ) [inline], [static]
```

Return the logical index among the objects included in CPU set `set`.
Consult all objects in the same level as `obj` and inside CPU set `set` in the logical order, and return the index of `obj` within them. If `set` covers the entire topology, this is the logical index of `obj`. Otherwise, this is similar to a logical index within the part of the topology defined by CPU set `set`.

Returns

the logical index among the objects included in the set if any.

-1 if the object is not included in the set.

Note

Objects with empty CPU sets are ignored (otherwise they would be considered included in any given set).

This function cannot work if obj does not have CPU sets (I/O objects).

23.16.2.8 hwloc_get_obj_inside_cpuset_by_depth()

```
static hwloc_obj_t hwloc_get_obj_inside_cpuset_by_depth (
            hwloc_topology_t topology,
            hwloc_const_cpuset_t set,
            int depth,
            unsigned idx ) [inline], [static]
```

Return the (logically) `idx` -th object at depth `depth` included in CPU set `set`.

Returns

the object if any, `NULL` otherwise.

Note

Objects with empty CPU sets are ignored (otherwise they would be considered included in any given set).

This function cannot work if objects at the given depth do not have CPU sets (I/O or Misc objects).

23.16.2.9 hwloc_get_obj_inside_cpuset_by_type()

```
static hwloc_obj_t hwloc_get_obj_inside_cpuset_by_type (
            hwloc_topology_t topology,
            hwloc_const_cpuset_t set,
            hwloc_obj_type_t type,
            unsigned idx )  [inline], [static]
```

Return the `idx` -th object of type `type` included in CPU set `set`.

Returns

the object if any.

`NULL` if there is no such object.

`NULL` if there is no depth for given type.

`NULL` if there are multiple depths for given type, the caller should fallback to hwloc_get_obj_inside_cpuset_by_depth().

Note

Objects with empty CPU sets are ignored (otherwise they would be considered included in any given set).

This function cannot work if objects of the given type do not have CPU sets (I/O or Misc objects).

23.17 Finding Objects covering at least CPU set

Functions

- static hwloc_obj_t hwloc_get_child_covering_cpuset (hwloc_topology_t topology, hwloc_const_cpuset_t set, hwloc_obj_t parent)
- static hwloc_obj_t hwloc_get_obj_covering_cpuset (hwloc_topology_t topology, hwloc_const_cpuset_t set)
- static hwloc_obj_t hwloc_get_next_obj_covering_cpuset_by_depth (hwloc_topology_t topology, hwloc_const_cpuset_t set, int depth, hwloc_obj_t prev)
- static hwloc_obj_t hwloc_get_next_obj_covering_cpuset_by_type (hwloc_topology_t topology, hwloc_const_cpuset_t set, hwloc_obj_type_t type, hwloc_obj_t prev)

23.17.1 Detailed Description

23.17.2 Function Documentation

23.17.2.1 hwloc_get_child_covering_cpuset()

```
static hwloc_obj_t hwloc_get_child_covering_cpuset (
            hwloc_topology_t topology,
            hwloc_const_cpuset_t set,
            hwloc_obj_t parent )  [inline], [static]
```

Get the child covering at least CPU set `set`.

Returns

the child that covers the set entirely.

`NULL` if no child matches or if `set` is empty.

Note

This function cannot work if parent does not have a CPU set (I/O or Misc objects).

23.17.2.2 hwloc_get_next_obj_covering_cpuset_by_depth()

```
static hwloc_obj_t hwloc_get_next_obj_covering_cpuset_by_depth (
            hwloc_topology_t topology,
            hwloc_const_cpuset_t set,
            int depth,
            hwloc_obj_t prev )  [inline], [static]
```

Iterate through same-depth objects covering at least CPU set `set`.
The next invokation should pass the previous return value in `prev` so as to obtain the next object covering at least another part of `set`.

Returns

the first object at depth `depth` covering at least part of CPU set `set` if object `prev` is `NULL`.

the next one if `prev` is not `NULL`.

`NULL` if there is no next object.

Note

This function cannot work if objects at the given depth do not have CPU sets (I/O or Misc objects).

23.17.2.3 hwloc_get_next_obj_covering_cpuset_by_type()

```
static hwloc_obj_t hwloc_get_next_obj_covering_cpuset_by_type (
            hwloc_topology_t topology,
            hwloc_const_cpuset_t set,
            hwloc_obj_type_t type,
            hwloc_obj_t prev ) [inline], [static]
```

Iterate through same-type objects covering at least CPU set `set`.
The next invokation should pass the previous return value in `prev` so as to obtain the next object of type `type` covering at least another part of `set`.

Returns

the first object of type `type` covering at least part of CPU set `set` if object `prev` is `NULL`.

the next one if `prev` is not `NULL`.

`NULL` if there is no next object.

`NULL` if there is no depth for the given type.

`NULL` if there are multiple depths for the given type, the caller should fallback to hwloc_get_next_obj_covering_cpuset_by_depth(

Note

This function cannot work if objects of the given type do not have CPU sets (I/O or Misc objects).

23.17.2.4 hwloc_get_obj_covering_cpuset()

```
static hwloc_obj_t hwloc_get_obj_covering_cpuset (
            hwloc_topology_t topology,
            hwloc_const_cpuset_t set ) [inline], [static]
```

Get the lowest object covering at least CPU set `set`.

Returns

the lowest object covering the set entirely.

`NULL` if no object matches or if `set` is empty.

23.18 Looking at Ancestor and Child Objects

Functions

- static hwloc_obj_t hwloc_get_ancestor_obj_by_depth (hwloc_topology_t topology, int depth, hwloc_obj_t obj)
- static hwloc_obj_t hwloc_get_ancestor_obj_by_type (hwloc_topology_t topology, hwloc_obj_type_t type, hwloc_obj_t obj)
- static hwloc_obj_t hwloc_get_common_ancestor_obj (hwloc_topology_t topology, hwloc_obj_t obj1, hwloc_obj_t obj2)
- static int hwloc_obj_is_in_subtree (hwloc_topology_t topology, hwloc_obj_t obj, hwloc_obj_t subtree_root)
- static hwloc_obj_t hwloc_get_next_child (hwloc_topology_t topology, hwloc_obj_t parent, hwloc_obj_t prev)

23.18.1 Detailed Description

Be sure to see the figure in Terms and Definitions that shows a complete topology tree, including depths, child/sibling/cousin relationships, and an example of an asymmetric topology where one package has fewer caches than its peers.

23.18.2 Function Documentation

23.18.2.1 hwloc_get_ancestor_obj_by_depth()

```
static hwloc_obj_t hwloc_get_ancestor_obj_by_depth (
            hwloc_topology_t topology,
            int depth,
            hwloc_obj_t obj )  [inline], [static]
```

Returns the ancestor object of `obj` at depth `depth`.

Returns

the ancestor if any.

`NULL` if no such ancestor exists.

Note

`depth` should not be the depth of PU or NUMA objects since they are ancestors of no objects (except Misc or I/O). This function rather expects an intermediate level depth, such as the depth of Packages, Cores, or Caches.

23.18.2.2 hwloc_get_ancestor_obj_by_type()

```
static hwloc_obj_t hwloc_get_ancestor_obj_by_type (
            hwloc_topology_t topology,
            hwloc_obj_type_t type,
            hwloc_obj_t obj )  [inline], [static]
```

Returns the ancestor object of `obj` with type `type`.

Returns

the ancestor if any.

`NULL` if no such ancestor exists.

Note

if multiple matching ancestors exist (e.g. multiple levels of HWLOC_OBJ_GROUP) the lowest one is returned.

`type` should not be HWLOC_OBJ_PU or HWLOC_OBJ_NUMANODE since these objects are ancestors of no objects (except Misc or I/O). This function rather expects an intermediate object type, such as HWLOC_OBJ_PACKAGE, HWLOC_OBJ_CORE, etc.

23.18.2.3 hwloc_get_common_ancestor_obj()

```
static hwloc_obj_t hwloc_get_common_ancestor_obj (
            hwloc_topology_t topology,
            hwloc_obj_t obj1,
            hwloc_obj_t obj2 )  [inline], [static]
```

Returns the common parent object to objects `obj1` and `obj2`.

Returns

the common ancestor.

Note

This function cannot return `NULL`.

23.18.2.4 hwloc_get_next_child()

```
static hwloc_obj_t hwloc_get_next_child (
            hwloc_topology_t topology,
            hwloc_obj_t parent,
            hwloc_obj_t prev )  [inline], [static]
```

Return the next child.

Return the next child among the normal children list, then among the memory children list, then among the I/O children list, then among the Misc children list.

Returns

the first child if `prev` is `NULL`.

the next child if `prev` is not `NULL`.

`NULL` when there is no next child.

23.18.2.5 hwloc_obj_is_in_subtree()

```
static int hwloc_obj_is_in_subtree (
            hwloc_topology_t topology,
            hwloc_obj_t obj,
            hwloc_obj_t subtree_root )  [inline], [static]
```

Returns true if `obj` is inside the subtree beginning with ancestor object `subtree_root`.

Returns

1 is the object is in the subtree, 0 otherwise.

Note

This function cannot work if `obj` and `subtree_root` objects do not have CPU sets (I/O or Misc objects).

23.19 Looking at Cache Objects

Functions

- static int hwloc_get_cache_type_depth (hwloc_topology_t topology, unsigned cachelevel, hwloc_obj_cache_type_t cachetype)
- static hwloc_obj_t hwloc_get_cache_covering_cpuset (hwloc_topology_t topology, hwloc_const_cpuset_t set)
- static hwloc_obj_t hwloc_get_shared_cache_covering_obj (hwloc_topology_t topology, hwloc_obj_t obj)

23.19.1 Detailed Description

23.19.2 Function Documentation

23.19.2.1 hwloc_get_cache_covering_cpuset()

```
static hwloc_obj_t hwloc_get_cache_covering_cpuset (
            hwloc_topology_t topology,
            hwloc_const_cpuset_t set )  [inline], [static]
```

Get the first data (or unified) cache covering a cpuset `set`.

Returns

a covering cache, or `NULL` if no cache matches.

23.19.2.2 hwloc_get_cache_type_depth()

```
static int hwloc_get_cache_type_depth (
            hwloc_topology_t topology,
            unsigned cachelevel,
            hwloc_obj_cache_type_t cachetype )  [inline], [static]
```

Find the depth of cache objects matching cache level and type.

Return the depth of the topology level that contains cache objects whose attributes match `cachelevel` and `cachetype`.

This function is identical to calling hwloc_get_type_depth() with the corresponding type such as HWLOC_OBJ_L1ICACHE, except that it may also return a Unified cache when looking for an instruction cache.

Returns

the depth of the unique matching unified cache level is returned if `cachetype` is HWLOC_OBJ_CACHE_UNIFIED.

the depth of either a matching cache level or a unified cache level if `cachetype` is HWLOC_OBJ_CACHE_DATA or HWLOC_OBJ_CACHE_INSTRUCTION.

the depth of the matching level if `cachetype` is `-1` but only one level matches.

HWLOC_TYPE_DEPTH_MULTIPLE if `cachetype` is `-1` but multiple levels match.

HWLOC_TYPE_DEPTH_UNKNOWN if no cache level matches.

23.19.2.3 hwloc_get_shared_cache_covering_obj()

```
static hwloc_obj_t hwloc_get_shared_cache_covering_obj (
            hwloc_topology_t topology,
            hwloc_obj_t obj )  [inline], [static]
```

Get the first data (or unified) cache shared between an object and somebody else.

Returns

a shared cache.

`NULL` if no cache matches or if an invalid object is given (e.g. I/O object).

23.20 Finding objects, miscellaneous helpers

Functions

- int hwloc_bitmap_singlify_per_core (hwloc_topology_t topology, hwloc_bitmap_t cpuset, unsigned which)
- static hwloc_obj_t hwloc_get_pu_obj_by_os_index (hwloc_topology_t topology, unsigned os_index)
- static hwloc_obj_t hwloc_get_numanode_obj_by_os_index (hwloc_topology_t topology, unsigned os_index)
- unsigned hwloc_get_closest_objs (hwloc_topology_t topology, hwloc_obj_t src, hwloc_obj_t *restrict objs, unsigned max)
- static hwloc_obj_t hwloc_get_obj_below_by_type (hwloc_topology_t topology, hwloc_obj_type_t type1, unsigned idx1, hwloc_obj_type_t type2, unsigned idx2)
- static hwloc_obj_t hwloc_get_obj_below_array_by_type (hwloc_topology_t topology, int nr, hwloc_obj_type_t *typev, unsigned *idxv)
- hwloc_obj_t hwloc_get_obj_with_same_locality (hwloc_topology_t topology, hwloc_obj_t src, hwloc_obj_type_t type, const char *subtype, const char *nameprefix, unsigned long flags)

23.20.1 Detailed Description

Be sure to see the figure in Terms and Definitions that shows a complete topology tree, including depths, child/sibling/cousin relationships, and an example of an asymmetric topology where one package has fewer caches than its peers.

23.20.2 Function Documentation

23.20.2.1 hwloc_bitmap_singlify_per_core()

```
int hwloc_bitmap_singlify_per_core (
            hwloc_topology_t topology,
            hwloc_bitmap_t cpuset,
            unsigned which )
```

Remove simultaneous multithreading PUs from a CPU set.
For each core in `topology`, if `cpuset` contains some PUs of that core, modify `cpuset` to only keep a single PU for that core.
`which` specifies which PU will be kept. PU are considered in physical index order. If 0, for each core, the function keeps the first PU that was originally set in `cpuset`.
If `which` is larger than the number of PUs in a core there were originally set in `cpuset`, no PU is kept for that core.

Returns

0.

Note

PUs that are not below a Core object are ignored (for instance if the topology does not contain any Core object). None of them is removed from `cpuset`.

23.20.2.2 hwloc_get_closest_objs()

```
unsigned hwloc_get_closest_objs (
            hwloc_topology_t topology,
            hwloc_obj_t src,
            hwloc_obj_t *restrict objs,
            unsigned max )
```

Do a depth-first traversal of the topology to find and sort.
all objects that are at the same depth than `src`. Report in `objs` up to `max` physically closest ones to `src`.

Returns

the number of objects returned in `objs`.

0 if `src` is an I/O object.

Note

This function requires the `src` object to have a CPU set.

23.20.2.3 hwloc_get_numanode_obj_by_os_index()

```
static hwloc_obj_t hwloc_get_numanode_obj_by_os_index (
            hwloc_topology_t topology,
            unsigned os_index )  [inline], [static]
```

Returns the object of type HWLOC_OBJ_NUMANODE with `os_index`.

This function is useful for converting a nodeset into the NUMA node objects it contains. When retrieving the current binding (e.g. with hwloc_get_membind() with HWLOC_MEMBIND_BYNODESET), one may iterate over the bits of the resulting nodeset with hwloc_bitmap_foreach_begin(), and find the corresponding NUMA nodes with this function.

Returns

the NUMA node object, or `NULL` if none matches.

23.20.2.4 hwloc_get_obj_below_array_by_type()

```
static hwloc_obj_t hwloc_get_obj_below_array_by_type (
            hwloc_topology_t topology,
            int nr,
            hwloc_obj_type_t * typev,
            unsigned * idxv )  [inline], [static]
```

Find an object below a chain of objects specified by types and indexes.

This is a generalized version of hwloc_get_obj_below_by_type().

Arrays `typev` and `idxv` must contain `nr` types and indexes.

Start from the top system object and walk the arrays `typev` and `idxv`. For each type and logical index couple in the arrays, look under the previously found object to find the index-th object of the given type. Indexes are specified within the parent, not withing the entire system.

For instance, if nr is 3, typev contains NODE, PACKAGE and CORE, and idxv contains 0, 1 and 2, return the third core object below the second package below the first NUMA node.

Returns

a matching object if any, `NULL` otherwise.

Note

This function requires all these objects and the root object to have a CPU set.

23.20.2.5 hwloc_get_obj_below_by_type()

```
static hwloc_obj_t hwloc_get_obj_below_by_type (
            hwloc_topology_t topology,
            hwloc_obj_type_t type1,
            unsigned idx1,
            hwloc_obj_type_t type2,
            unsigned idx2 )  [inline], [static]
```

Find an object below another object, both specified by types and indexes.
Start from the top system object and find object of type `type1` and logical index `idx1`. Then look below this object and find another object of type `type2` and logical index `idx2`. Indexes are specified within the parent, not withing the entire system.
For instance, if type1 is PACKAGE, idx1 is 2, type2 is CORE and idx2 is 3, return the fourth core object below the third package.

Returns

a matching object if any, `NULL` otherwise.

Note

This function requires these objects to have a CPU set.

23.20.2.6 hwloc_get_obj_with_same_locality()

```
hwloc_obj_t hwloc_get_obj_with_same_locality (
            hwloc_topology_t topology,
            hwloc_obj_t src,
            hwloc_obj_type_t type,
            const char * subtype,
            const char * nameprefix,
            unsigned long flags )
```

Return an object of a different type with same locality.
If the source object `src` is a normal or memory type, this function returns an object of type `type` with same CPU and node sets, either below or above in the hierarchy.
If the source object `src` is a PCI or an OS device within a PCI device, the function may either return that PCI device, or another OS device in the same PCI parent. This may for instance be useful for converting between OS devices such as "nvml0" or "rsmi1" used in distance structures into the the PCI device, or the CUDA or OpenCL OS device that correspond to the same physical card.
If not `NULL`, parameter `subtype` only select objects whose subtype attribute exists and is `subtype` (case-insensitively), for instance "OpenCL" or "CUDA".
If not `NULL`, parameter `nameprefix` only selects objects whose name attribute exists and starts with `nameprefix` (case-insensitively), for instance "rsmi" for matching "rsmi0".
If multiple objects match, the first one is returned.
This function will not walk the hierarchy across bridges since the PCI locality may become different. This function cannot also convert between normal/memory objects and I/O or Misc objects.
`flags` must be `0` for now.

Returns

An object with identical locality, matching `subtype` and `nameprefix` if any.

`NULL` if no matching object could be found, or if the source object and target type are incompatible, for instance if converting between CPU and I/O objects.

23.20.2.7 hwloc_get_pu_obj_by_os_index()

```
static hwloc_obj_t hwloc_get_pu_obj_by_os_index (
            hwloc_topology_t topology,
            unsigned os_index )  [inline], [static]
```

Returns the object of type HWLOC_OBJ_PU with `os_index`.
This function is useful for converting a CPU set into the PU objects it contains. When retrieving the current binding (e.g. with hwloc_get_cpubind()), one may iterate over the bits of the resulting CPU set with hwloc_bitmap_foreach_begin(), and find the corresponding PUs with this function.

Returns

the PU object, or `NULL` if none matches.

23.21 Distributing items over a topology

Enumerations

- enum hwloc_distrib_flags_e { HWLOC_DISTRIB_FLAG_REVERSE }

Functions

- static int hwloc_distrib (hwloc_topology_t topology, hwloc_obj_t *roots, unsigned n_roots, hwloc_cpuset_t *set, unsigned n, int until, unsigned long flags)

23.21.1 Detailed Description

23.21.2 Enumeration Type Documentation

23.21.2.1 hwloc_distrib_flags_e

`enum hwloc_distrib_flags_e`

Flags to be given to hwloc_distrib().

Enumerator

HWLOC_DISTRIB_FLAG_REVERSE	Distrib in reverse order, starting from the last objects.

23.21.3 Function Documentation

23.21.3.1 hwloc_distrib()

```
static int hwloc_distrib (
            hwloc_topology_t topology,
            hwloc_obj_t * roots,
            unsigned n_roots,
            hwloc_cpuset_t * set,
            unsigned n,
            int until,
            unsigned long flags )  [inline], [static]
```

Distribute `n` items over the topology under `roots`.

Array `set` will be filled with `n` cpusets recursively distributed linearly over the topology under objects `roots`, down to depth `until` (which can be INT_MAX to distribute down to the finest level).

`n_roots` is usually 1 and `roots` only contains the topology root object so as to distribute over the entire topology. This is typically useful when an application wants to distribute `n` threads over a machine, giving each of them as much private cache as possible and keeping them locally in number order.

The caller may typically want to also call hwloc_bitmap_singlify() before binding a thread so that it does not move at all.

`flags` should be 0 or a OR'ed set of hwloc_distrib_flags_e.

Returns

0 on success, -1 on error.

Note

On hybrid CPUs (or asymmetric platforms), distribution may be suboptimal since the number of cores or P↩Us inside packages or below caches may vary (the top-down recursive partitioning ignores these numbers until reaching their levels). Hence it is recommended to distribute only inside a single homogeneous domain. For instance on a CPU with energy-efficient E-cores and high-performance P-cores, one should distribute separately N tasks on E-cores and M tasks on P-cores instead of trying to distribute directly M+N tasks on the entire CPUs.

This function requires the `roots` objects to have a CPU set.

23.22 CPU and node sets of entire topologies

Functions

- hwloc_const_cpuset_t hwloc_topology_get_complete_cpuset (hwloc_topology_t topology)
- hwloc_const_cpuset_t hwloc_topology_get_topology_cpuset (hwloc_topology_t topology)
- hwloc_const_cpuset_t hwloc_topology_get_allowed_cpuset (hwloc_topology_t topology)
- hwloc_const_nodeset_t hwloc_topology_get_complete_nodeset (hwloc_topology_t topology)
- hwloc_const_nodeset_t hwloc_topology_get_topology_nodeset (hwloc_topology_t topology)
- hwloc_const_nodeset_t hwloc_topology_get_allowed_nodeset (hwloc_topology_t topology)

23.22.1 Detailed Description

23.22.2 Function Documentation

23.22.2.1 hwloc_topology_get_allowed_cpuset()

```
hwloc_const_cpuset_t hwloc_topology_get_allowed_cpuset (
            hwloc_topology_t topology )
```

Get allowed CPU set.

Returns

the CPU set of allowed processors of the system.

Note

This function cannot return NULL.

If the topology flag HWLOC_TOPOLOGY_FLAG_INCLUDE_DISALLOWED was not set, this is identical to hwloc_topology_get_topology_cpuset(), which means all PUs are allowed.

If HWLOC_TOPOLOGY_FLAG_INCLUDE_DISALLOWED was set, applying hwloc_bitmap_intersects() on the result of this function and on an object cpuset checks whether there are allowed PUs inside that object. Applying hwloc_bitmap_and() returns the list of these allowed PUs.

The returned cpuset is not newly allocated and should thus not be changed or freed, hwloc_bitmap_dup() must be used to obtain a local copy.

23.22.2.2 hwloc_topology_get_allowed_nodeset()

```
hwloc_const_nodeset_t hwloc_topology_get_allowed_nodeset (
            hwloc_topology_t topology )
```

Get allowed node set.

Returns

the node set of allowed memory of the system.

Note

This function cannot return NULL.

If the topology flag HWLOC_TOPOLOGY_FLAG_INCLUDE_DISALLOWED was not set, this is identical to hwloc_topology_get_topology_nodeset(), which means all NUMA nodes are allowed.

If HWLOC_TOPOLOGY_FLAG_INCLUDE_DISALLOWED was set, applying hwloc_bitmap_intersects() on the result of this function and on an object nodeset checks whether there are allowed NUMA nodes inside that object. Applying hwloc_bitmap_and() returns the list of these allowed NUMA nodes.

The returned nodeset is not newly allocated and should thus not be changed or freed, hwloc_bitmap_dup() must be used to obtain a local copy.

23.22.2.3 hwloc_topology_get_complete_cpuset()

```
hwloc_const_cpuset_t hwloc_topology_get_complete_cpuset (
            hwloc_topology_t topology )
```

Get complete CPU set.

Returns

the complete CPU set of processors of the system.

Note

This function cannot return NULL.

The returned cpuset is not newly allocated and should thus not be changed or freed; hwloc_bitmap_dup() must be used to obtain a local copy.

This is equivalent to retrieving the root object complete CPU-set.

23.22.2.4 hwloc_topology_get_complete_nodeset()

```
hwloc_const_nodeset_t hwloc_topology_get_complete_nodeset (
            hwloc_topology_t topology )
```

Get complete node set.

Returns

the complete node set of memory of the system.

Note

This function cannot return NULL.

The returned nodeset is not newly allocated and should thus not be changed or freed; hwloc_bitmap_dup() must be used to obtain a local copy.

This is equivalent to retrieving the root object complete nodeset.

23.22.2.5 hwloc_topology_get_topology_cpuset()

```
hwloc_const_cpuset_t hwloc_topology_get_topology_cpuset (
            hwloc_topology_t topology )
```

Get topology CPU set.

Returns

the CPU set of processors of the system for which hwloc provides topology information. This is equivalent to the cpuset of the system object.

Note

This function cannot return NULL.

The returned cpuset is not newly allocated and should thus not be changed or freed; hwloc_bitmap_dup() must be used to obtain a local copy.

This is equivalent to retrieving the root object CPU-set.

23.22.2.6 hwloc_topology_get_topology_nodeset()

```
hwloc_const_nodeset_t hwloc_topology_get_topology_nodeset (
            hwloc_topology_t topology )
```

Get topology node set.

Returns

the node set of memory of the system for which hwloc provides topology information. This is equivalent to the nodeset of the system object.

Note

This function cannot return `NULL`.

The returned nodeset is not newly allocated and should thus not be changed or freed; hwloc_bitmap_dup() must be used to obtain a local copy.

This is equivalent to retrieving the root object nodeset.

23.23 Converting between CPU sets and node sets

Functions

- static int hwloc_cpuset_to_nodeset (hwloc_topology_t topology, hwloc_const_cpuset_t _cpuset, hwloc_nodeset_t nodeset)
- static int hwloc_cpuset_from_nodeset (hwloc_topology_t topology, hwloc_cpuset_t _cpuset, hwloc_const_nodeset_t nodeset)

23.23.1 Detailed Description

23.23.2 Function Documentation

23.23.2.1 hwloc_cpuset_from_nodeset()

```
static int hwloc_cpuset_from_nodeset (
            hwloc_topology_t topology,
            hwloc_cpuset_t _cpuset,
            hwloc_const_nodeset_t nodeset )  [inline], [static]
```

Convert a NUMA node set into a CPU set.
For each NUMA node included in the input `nodeset`, set the corresponding local PUs in the output `_cpuset`.
If some CPUs have no local NUMA nodes, this function never sets their indexes in the output CPU set, even if a full node set is given in input.
Hence the entire topology node set is converted into the set of all CPUs that have some local NUMA nodes.

Returns

0 on success.

-1 with errno set to `ENOMEM` on internal reallocation failure.

23.23.2.2 hwloc_cpuset_to_nodeset()

```
static int hwloc_cpuset_to_nodeset (
            hwloc_topology_t topology,
            hwloc_const_cpuset_t _cpuset,
            hwloc_nodeset_t nodeset )  [inline], [static]
```

Convert a CPU set into a NUMA node set.
For each PU included in the input `_cpuset`, set the corresponding local NUMA node(s) in the output `nodeset`.
If some NUMA nodes have no CPUs at all, this function never sets their indexes in the output node set, even if a full CPU set is given in input.
Hence the entire topology CPU set is converted into the set of all nodes that have some local CPUs.

Returns

0 on success.

-1 with errno set to `ENOMEM` on internal reallocation failure.

23.24 Finding I/O objects

Functions

- static hwloc_obj_t hwloc_get_non_io_ancestor_obj (hwloc_topology_t topology, hwloc_obj_t ioobj)
- static hwloc_obj_t hwloc_get_next_pcidev (hwloc_topology_t topology, hwloc_obj_t prev)
- static hwloc_obj_t hwloc_get_pcidev_by_busid (hwloc_topology_t topology, unsigned domain, unsigned bus, unsigned dev, unsigned func)
- static hwloc_obj_t hwloc_get_pcidev_by_busidstring (hwloc_topology_t topology, const char *busid)
- static hwloc_obj_t hwloc_get_next_osdev (hwloc_topology_t topology, hwloc_obj_t prev)
- static hwloc_obj_t hwloc_get_next_bridge (hwloc_topology_t topology, hwloc_obj_t prev)
- static int hwloc_bridge_covers_pcibus (hwloc_obj_t bridge, unsigned domain, unsigned bus)

23.24.1 Detailed Description

23.24.2 Function Documentation

23.24.2.1 hwloc_bridge_covers_pcibus()

```
static int hwloc_bridge_covers_pcibus (
            hwloc_obj_t bridge,
            unsigned domain,
            unsigned bus )  [inline], [static]
```

23.24.2.2 hwloc_get_next_bridge()

```
static hwloc_obj_t hwloc_get_next_bridge (
            hwloc_topology_t topology,
            hwloc_obj_t prev )  [inline], [static]
```

Get the next bridge in the system.

Returns

the first bridge if `prev` is `NULL`.

the next bridge if `prev` is not `NULL`.

`NULL` if there is no next bridge.

23.24.2.3 hwloc_get_next_osdev()

```
static hwloc_obj_t hwloc_get_next_osdev (
            hwloc_topology_t topology,
            hwloc_obj_t prev )  [inline], [static]
```

Get the next OS device in the system.

Returns

the first OS device if `prev` is `NULL`.

the next OS device if `prev` is not `NULL`.

`NULL` if there is no next OS device.

23.24.2.4 hwloc_get_next_pcidev()

```
static hwloc_obj_t hwloc_get_next_pcidev (
            hwloc_topology_t topology,
            hwloc_obj_t prev ) [inline], [static]
```

Get the next PCI device in the system.

Returns

the first PCI device if `prev` is `NULL`.

the next PCI device if `prev` is not `NULL`.

`NULL` if there is no next PCI device.

23.24.2.5 hwloc_get_non_io_ancestor_obj()

```
static hwloc_obj_t hwloc_get_non_io_ancestor_obj (
            hwloc_topology_t topology,
            hwloc_obj_t ioobj ) [inline], [static]
```

Get the first non-I/O ancestor object.
Given the I/O object `ioobj`, find the smallest non-I/O ancestor object. This object (normal or memory) may then be used for binding because it has non-NULL CPU and node sets and because its locality is the same as `ioobj`.

Returns

a non-I/O object.

Note

This function cannot return `NULL`.

The resulting object is usually a normal object but it could also be a memory object (e.g. NUMA node) in future platforms if I/O objects ever get attached to memory instead of CPUs.

23.24.2.6 hwloc_get_pcidev_by_busid()

```
static hwloc_obj_t hwloc_get_pcidev_by_busid (
            hwloc_topology_t topology,
            unsigned domain,
            unsigned bus,
            unsigned dev,
            unsigned func ) [inline], [static]
```

Find the PCI device object matching the PCI bus id given domain, bus device and function PCI bus id.

Returns

a matching PCI device object if any, `NULL` otherwise.

23.24.2.7 hwloc_get_pcidev_by_busidstring()

```
static hwloc_obj_t hwloc_get_pcidev_by_busidstring (
            hwloc_topology_t topology,
            const char * busid ) [inline], [static]
```

Find the PCI device object matching the PCI bus id given as a string xxxx:yy:zz.t or yy:zz.t.

Returns

a matching PCI device object if any, `NULL` otherwise.

23.25 The bitmap API

Macros

- #define hwloc_bitmap_foreach_begin(id, bitmap)
- #define hwloc_bitmap_foreach_end()

Typedefs

- typedef struct hwloc_bitmap_s * hwloc_bitmap_t
- typedef const struct hwloc_bitmap_s * hwloc_const_bitmap_t

Functions

- hwloc_bitmap_t hwloc_bitmap_alloc (void)
- hwloc_bitmap_t hwloc_bitmap_alloc_full (void)
- void hwloc_bitmap_free (hwloc_bitmap_t bitmap)
- hwloc_bitmap_t hwloc_bitmap_dup (hwloc_const_bitmap_t bitmap)
- int hwloc_bitmap_copy (hwloc_bitmap_t dst, hwloc_const_bitmap_t src)
- int hwloc_bitmap_snprintf (char *restrict buf, size_t buflen, hwloc_const_bitmap_t bitmap)
- int hwloc_bitmap_asprintf (char **strp, hwloc_const_bitmap_t bitmap)
- int hwloc_bitmap_sscanf (hwloc_bitmap_t bitmap, const char *restrict string)
- int hwloc_bitmap_list_snprintf (char *restrict buf, size_t buflen, hwloc_const_bitmap_t bitmap)
- int hwloc_bitmap_list_asprintf (char **strp, hwloc_const_bitmap_t bitmap)
- int hwloc_bitmap_list_sscanf (hwloc_bitmap_t bitmap, const char *restrict string)
- int hwloc_bitmap_taskset_snprintf (char *restrict buf, size_t buflen, hwloc_const_bitmap_t bitmap)
- int hwloc_bitmap_taskset_asprintf (char **strp, hwloc_const_bitmap_t bitmap)
- int hwloc_bitmap_taskset_sscanf (hwloc_bitmap_t bitmap, const char *restrict string)
- void hwloc_bitmap_zero (hwloc_bitmap_t bitmap)
- void hwloc_bitmap_fill (hwloc_bitmap_t bitmap)
- int hwloc_bitmap_only (hwloc_bitmap_t bitmap, unsigned id)
- int hwloc_bitmap_allbut (hwloc_bitmap_t bitmap, unsigned id)
- int hwloc_bitmap_from_ulong (hwloc_bitmap_t bitmap, unsigned long mask)
- int hwloc_bitmap_from_ith_ulong (hwloc_bitmap_t bitmap, unsigned i, unsigned long mask)
- int hwloc_bitmap_from_ulongs (hwloc_bitmap_t bitmap, unsigned nr, const unsigned long *masks)
- int hwloc_bitmap_set (hwloc_bitmap_t bitmap, unsigned id)
- int hwloc_bitmap_set_range (hwloc_bitmap_t bitmap, unsigned begin, int end)
- int hwloc_bitmap_set_ith_ulong (hwloc_bitmap_t bitmap, unsigned i, unsigned long mask)
- int hwloc_bitmap_clr (hwloc_bitmap_t bitmap, unsigned id)
- int hwloc_bitmap_clr_range (hwloc_bitmap_t bitmap, unsigned begin, int end)
- int hwloc_bitmap_singlify (hwloc_bitmap_t bitmap)
- unsigned long hwloc_bitmap_to_ulong (hwloc_const_bitmap_t bitmap)
- unsigned long hwloc_bitmap_to_ith_ulong (hwloc_const_bitmap_t bitmap, unsigned i)
- int hwloc_bitmap_to_ulongs (hwloc_const_bitmap_t bitmap, unsigned nr, unsigned long *masks)
- int hwloc_bitmap_nr_ulongs (hwloc_const_bitmap_t bitmap)
- int hwloc_bitmap_isset (hwloc_const_bitmap_t bitmap, unsigned id)
- int hwloc_bitmap_iszero (hwloc_const_bitmap_t bitmap)
- int hwloc_bitmap_isfull (hwloc_const_bitmap_t bitmap)
- int hwloc_bitmap_first (hwloc_const_bitmap_t bitmap)
- int hwloc_bitmap_next (hwloc_const_bitmap_t bitmap, int prev)
- int hwloc_bitmap_last (hwloc_const_bitmap_t bitmap)
- int hwloc_bitmap_weight (hwloc_const_bitmap_t bitmap)
- int hwloc_bitmap_first_unset (hwloc_const_bitmap_t bitmap)
- int hwloc_bitmap_next_unset (hwloc_const_bitmap_t bitmap, int prev)
- int hwloc_bitmap_last_unset (hwloc_const_bitmap_t bitmap)
- int hwloc_bitmap_or (hwloc_bitmap_t res, hwloc_const_bitmap_t bitmap1, hwloc_const_bitmap_t bitmap2)

- int hwloc_bitmap_and (hwloc_bitmap_t res, hwloc_const_bitmap_t bitmap1, hwloc_const_bitmap_t bitmap2)
- int hwloc_bitmap_andnot (hwloc_bitmap_t res, hwloc_const_bitmap_t bitmap1, hwloc_const_bitmap_t bitmap2)
- int hwloc_bitmap_xor (hwloc_bitmap_t res, hwloc_const_bitmap_t bitmap1, hwloc_const_bitmap_t bitmap2)
- int hwloc_bitmap_not (hwloc_bitmap_t res, hwloc_const_bitmap_t bitmap)
- int hwloc_bitmap_intersects (hwloc_const_bitmap_t bitmap1, hwloc_const_bitmap_t bitmap2)
- int hwloc_bitmap_isincluded (hwloc_const_bitmap_t sub_bitmap, hwloc_const_bitmap_t super_bitmap)
- int hwloc_bitmap_isequal (hwloc_const_bitmap_t bitmap1, hwloc_const_bitmap_t bitmap2)
- int hwloc_bitmap_compare_first (hwloc_const_bitmap_t bitmap1, hwloc_const_bitmap_t bitmap2)
- int hwloc_bitmap_compare (hwloc_const_bitmap_t bitmap1, hwloc_const_bitmap_t bitmap2)

23.25.1 Detailed Description

The hwloc_bitmap_t type represents a set of integers (positive or null). A bitmap may be of infinite size (all bits are set after some point). A bitmap may even be full if all bits are set.
Bitmaps are used by hwloc for sets of OS processors (which may actually be hardware threads) as by hwloc_cpuset_t (a typedef for hwloc_bitmap_t), or sets of NUMA memory nodes as hwloc_nodeset_t (also a typedef for hwloc_bitmap_t). Those are used for cpuset and nodeset fields in the hwloc_obj structure, see Object Sets (hwloc_cpuset_t and hwloc_nodeset_t).
Both CPU and node sets are always indexed by OS physical number. However users should usually not build CPU and node sets manually (e.g. with hwloc_bitmap_set()). One should rather use existing object sets and combine them with hwloc_bitmap_or(), etc. For instance, binding the current thread on a pair of cores may be performed with:

```
hwloc_obj_t core1 = ... , core2 = ... ;
hwloc_bitmap_t set = hwloc_bitmap_alloc();
hwloc_bitmap_or(set, core1->cpuset, core2->cpuset);
hwloc_set_cpubind(topology, set, HWLOC_CPUBIND_THREAD);
hwloc_bitmap_free(set);
```

Note

Most functions below return 0 on success and -1 on error. The usual error case would be an internal failure to realloc/extend the storage of the bitmap (`errno` would be set to `ENOMEM`). See also Error reporting in the API.

Several examples of using the bitmap API are available under the doc/examples/ directory in the source tree. Regression tests such as tests/hwloc/hwloc_bitmap∗.c also make intensive use of this API.

23.25.2 Macro Definition Documentation

23.25.2.1 hwloc_bitmap_foreach_begin

```
#define hwloc_bitmap_foreach_begin(
            id,
            bitmap )
```

Loop macro iterating on bitmap `bitmap`.
The loop must start with hwloc_bitmap_foreach_begin() and end with hwloc_bitmap_foreach_end() followed by a terminating ';'.
`id` is the loop variable; it should be an unsigned int. The first iteration will set `id` to the lowest index in the bitmap. Successive iterations will iterate through, in order, all remaining indexes set in the bitmap. To be specific: each iteration will return a value for `id` such that hwloc_bitmap_isset(bitmap, id) is true.
The assert prevents the loop from being infinite if the bitmap is infinitely set.

23.25.2.2 hwloc_bitmap_foreach_end

```
#define hwloc_bitmap_foreach_end( )
```

End of loop macro iterating on a bitmap.
Needs a terminating ';'.

See also

hwloc_bitmap_foreach_begin()

23.25.3 Typedef Documentation

23.25.3.1 hwloc_bitmap_t

```
typedef struct hwloc_bitmap_s* hwloc_bitmap_t
```

Set of bits represented as an opaque pointer to an internal bitmap.

23.25.3.2 hwloc_const_bitmap_t

```
typedef const struct hwloc_bitmap_s* hwloc_const_bitmap_t
```

a non-modifiable hwloc_bitmap_t

23.25.4 Function Documentation

23.25.4.1 hwloc_bitmap_allbut()

```
int hwloc_bitmap_allbut (
            hwloc_bitmap_t bitmap,
            unsigned id )
```

Fill the bitmap `and` clear the index `id`.

23.25.4.2 hwloc_bitmap_alloc()

```
hwloc_bitmap_t hwloc_bitmap_alloc (
            void )
```

Allocate a new empty bitmap.

Returns

A valid bitmap or `NULL`.

The bitmap should be freed by a corresponding call to hwloc_bitmap_free().

23.25.4.3 hwloc_bitmap_alloc_full()

```
hwloc_bitmap_t hwloc_bitmap_alloc_full (
            void )
```

Allocate a new full bitmap.

Returns

A valid bitmap or `NULL`.

The bitmap should be freed by a corresponding call to hwloc_bitmap_free().

23.25.4.4 hwloc_bitmap_and()

```
int hwloc_bitmap_and (
            hwloc_bitmap_t res,
            hwloc_const_bitmap_t bitmap1,
            hwloc_const_bitmap_t bitmap2 )
```

And bitmaps `bitmap1` and `bitmap2` and store the result in bitmap `res`.
`res` can be the same as `bitmap1` or `bitmap2`

23.25.4.5 hwloc_bitmap_andnot()

```
int hwloc_bitmap_andnot (
            hwloc_bitmap_t res,
            hwloc_const_bitmap_t bitmap1,
            hwloc_const_bitmap_t bitmap2 )
```

And bitmap `bitmap1` and the negation of `bitmap2` and store the result in bitmap `res`.
`res` can be the same as `bitmap1` or `bitmap2`

23.25.4.6 hwloc_bitmap_asprintf()

```
int hwloc_bitmap_asprintf (
            char ** strp,
            hwloc_const_bitmap_t bitmap )
```

Stringify a bitmap into a newly allocated string.

Returns

0 on success, -1 on error.

23.25.4.7 hwloc_bitmap_clr()

```
int hwloc_bitmap_clr (
            hwloc_bitmap_t bitmap,
            unsigned id )
```

Remove index `id` from bitmap `bitmap`.

23.25.4.8 hwloc_bitmap_clr_range()

```
int hwloc_bitmap_clr_range (
            hwloc_bitmap_t bitmap,
            unsigned begin,
            int end )
```

Remove indexes from `begin` to `end` in bitmap `bitmap`.
If `end` is `-1`, the range is infinite.

23.25.4.9 hwloc_bitmap_compare()

```
int hwloc_bitmap_compare (
            hwloc_const_bitmap_t bitmap1,
            hwloc_const_bitmap_t bitmap2 )
```

Compare bitmaps `bitmap1` and `bitmap2` in lexicographic order.
Lexicographic comparison of bitmaps, starting for their highest indexes. Compare last indexes first, then second, etc. The empty bitmap is considered lower than anything.

Returns

-1 if `bitmap1` is considered smaller than `bitmap2`.

1 if `bitmap1` is considered larger than `bitmap2`.

0 if bitmaps are equal (contrary to hwloc_bitmap_compare_first()).

For instance comparing binary bitmaps 0011 and 0110 returns -1 (hence 0011 is considered smaller than 0110). Comparing 00101 and 01010 returns -1 too.

Note

This is different from the non-existing hwloc_bitmap_compare_last() which would only compare the highest index of each bitmap.

23.25.4.10 hwloc_bitmap_compare_first()

```
int hwloc_bitmap_compare_first (
            hwloc_const_bitmap_t bitmap1,
            hwloc_const_bitmap_t bitmap2 )
```

Compare bitmaps `bitmap1` and `bitmap2` using their lowest index.
A bitmap is considered smaller if its least significant bit is smaller. The empty bitmap is considered higher than anything (because its least significant bit does not exist).

Returns

-1 if `bitmap1` is considered smaller than `bitmap2`.

1 if `bitmap1` is considered larger than `bitmap2`.

For instance comparing binary bitmaps 0011 and 0110 returns -1 (hence 0011 is considered smaller than 0110) because least significant bit of 0011 (0001) is smaller than least significant bit of 0110 (0010). Comparing 01001 and 00110 would also return -1 for the same reason.

Returns

0 if bitmaps are considered equal, even if they are not strictly equal. They just need to have the same least significant bit. For instance, comparing binary bitmaps 0010 and 0110 returns 0 because they have the same least significant bit.

23.25.4.11 hwloc_bitmap_copy()

```
int hwloc_bitmap_copy (
            hwloc_bitmap_t dst,
            hwloc_const_bitmap_t src )
```

Copy the contents of bitmap `src` into the already allocated bitmap `dst`.

23.25.4.12 hwloc_bitmap_dup()

```
hwloc_bitmap_t hwloc_bitmap_dup (
            hwloc_const_bitmap_t bitmap )
```

Duplicate bitmap `bitmap` by allocating a new bitmap and copying `bitmap` contents.
If `bitmap` is `NULL`, `NULL` is returned.

23.25.4.13 hwloc_bitmap_fill()

```
void hwloc_bitmap_fill (
            hwloc_bitmap_t bitmap )
```

Fill bitmap `bitmap` with all possible indexes (even if those objects don't exist or are otherwise unavailable)

23.25.4.14 hwloc_bitmap_first()

```
int hwloc_bitmap_first (
            hwloc_const_bitmap_t bitmap )
```

Compute the first index (least significant bit) in bitmap `bitmap`.

Returns

the first index set in `bitmap`.

-1 if `bitmap` is empty.

23.25.4.15 hwloc_bitmap_first_unset()

```
int hwloc_bitmap_first_unset (
            hwloc_const_bitmap_t bitmap )
```

Compute the first unset index (least significant bit) in bitmap `bitmap`.

Returns

the first unset index in `bitmap`.

-1 if `bitmap` is full.

23.25.4.16 hwloc_bitmap_free()

```
void hwloc_bitmap_free (
            hwloc_bitmap_t bitmap )
```

Free bitmap `bitmap`.
If `bitmap` is `NULL`, no operation is performed.

23.25.4.17 hwloc_bitmap_from_ith_ulong()

```
int hwloc_bitmap_from_ith_ulong (
            hwloc_bitmap_t bitmap,
            unsigned i,
            unsigned long mask )
```

Setup bitmap `bitmap` from unsigned long `mask` used as `i` -th subset.

23.25.4.18 hwloc_bitmap_from_ulong()

```
int hwloc_bitmap_from_ulong (
            hwloc_bitmap_t bitmap,
            unsigned long mask )
```

Setup bitmap `bitmap` from unsigned long `mask`.

23.25.4.19 hwloc_bitmap_from_ulongs()

```
int hwloc_bitmap_from_ulongs (
            hwloc_bitmap_t bitmap,
            unsigned nr,
            const unsigned long * masks )
```

Setup bitmap `bitmap` from unsigned longs `masks` used as first `nr` subsets.

23.25.4.20 hwloc_bitmap_intersects()

```
int hwloc_bitmap_intersects (
            hwloc_const_bitmap_t bitmap1,
            hwloc_const_bitmap_t bitmap2 )
```

Test whether bitmaps `bitmap1` and `bitmap2` intersects.

Returns

1 if bitmaps intersect, 0 otherwise.

Note

The empty bitmap does not intersect any other bitmap.

23.25.4.21 hwloc_bitmap_isequal()

```
int hwloc_bitmap_isequal (
            hwloc_const_bitmap_t bitmap1,
            hwloc_const_bitmap_t bitmap2 )
```

Test whether bitmap `bitmap1` is equal to bitmap `bitmap2`.

Returns

1 if bitmaps are equal, 0 otherwise.

23.25.4.22 hwloc_bitmap_isfull()

```
int hwloc_bitmap_isfull (
            hwloc_const_bitmap_t bitmap )
```

Test whether bitmap `bitmap` is completely full.

Returns

1 if bitmap is full, 0 otherwise.

Note

A full bitmap is always infinitely set.

23.25.4.23 hwloc_bitmap_isincluded()

```
int hwloc_bitmap_isincluded (
            hwloc_const_bitmap_t sub_bitmap,
            hwloc_const_bitmap_t super_bitmap )
```

Test whether bitmap `sub_bitmap` is part of bitmap `super_bitmap`.

Returns

1 if `sub_bitmap` is included in `super_bitmap`, 0 otherwise.

Note

The empty bitmap is considered included in any other bitmap.

23.25.4.24 hwloc_bitmap_isset()

```
int hwloc_bitmap_isset (
            hwloc_const_bitmap_t bitmap,
            unsigned id )
```

Test whether index `id` is part of bitmap `bitmap`.

Returns

1 if the bit at index `id` is set in bitmap `bitmap`, 0 otherwise.

23.25.4.25 hwloc_bitmap_iszero()

```
int hwloc_bitmap_iszero (
            hwloc_const_bitmap_t bitmap )
```

Test whether bitmap `bitmap` is empty.

Returns

1 if bitmap is empty, 0 otherwise.

23.25.4.26 hwloc_bitmap_last()

```
int hwloc_bitmap_last (
            hwloc_const_bitmap_t bitmap )
```

Compute the last index (most significant bit) in bitmap `bitmap`.

Returns

the last index set in `bitmap`.

-1 if `bitmap` is empty, or if `bitmap` is infinitely set.

23.25.4.27 hwloc_bitmap_last_unset()

```
int hwloc_bitmap_last_unset (
            hwloc_const_bitmap_t bitmap )
```

Compute the last unset index (most significant bit) in bitmap `bitmap`.

Returns

the last index unset in `bitmap`.

-1 if `bitmap` is full, or if `bitmap` is not infinitely set.

23.25.4.28 hwloc_bitmap_list_asprintf()

```
int hwloc_bitmap_list_asprintf (
            char ** strp,
            hwloc_const_bitmap_t bitmap )
```

Stringify a bitmap into a newly allocated list string.

Returns

0 on success, -1 on error.

23.25.4.29 hwloc_bitmap_list_snprintf()

```
int hwloc_bitmap_list_snprintf (
            char *restrict buf,
            size_t buflen,
            hwloc_const_bitmap_t bitmap )
```

Stringify a bitmap in the list format.
Lists are comma-separated indexes or ranges. Ranges are dash separated indexes. The last range may not have an ending indexes if the bitmap is infinitely set.
Up to `buflen` characters may be written in buffer `buf`.
If `buflen` is 0, `buf` may safely be `NULL`.

Returns

the number of characters that were actually written if not truncating, or that would have been written (not including the ending \0).

23.25.4.30 hwloc_bitmap_list_sscanf()

```
int hwloc_bitmap_list_sscanf (
            hwloc_bitmap_t bitmap,
            const char *restrict string )
```

Parse a list string and stores it in bitmap `bitmap`.

Returns

0 on success, -1 on error.

23.25.4.31 hwloc_bitmap_next()

```
int hwloc_bitmap_next (
            hwloc_const_bitmap_t bitmap,
            int prev )
```

Compute the next index in bitmap `bitmap` which is after index `prev`.

Returns

the first index set in `bitmap` if `prev` is `-1`.

the next index set in `bitmap` if `prev` is not `-1`.

-1 if no index with higher index is set in `bitmap`.

23.25.4.32 hwloc_bitmap_next_unset()

```
int hwloc_bitmap_next_unset (
            hwloc_const_bitmap_t bitmap,
            int prev )
```

Compute the next unset index in bitmap `bitmap` which is after index `prev`.

Returns

the first index unset in `bitmap` if `prev` is `-1`.

the next index unset in `bitmap` if `prev` is not `-1`.

-1 if no index with higher index is unset in `bitmap`.

23.25.4.33 hwloc_bitmap_not()

```
int hwloc_bitmap_not (
            hwloc_bitmap_t res,
            hwloc_const_bitmap_t bitmap )
```

Negate bitmap `bitmap` and store the result in bitmap `res`.
`res` can be the same as `bitmap`

23.25.4.34 hwloc_bitmap_nr_ulongs()

```
int hwloc_bitmap_nr_ulongs (
            hwloc_const_bitmap_t bitmap )
```

Return the number of unsigned longs required for storing bitmap `bitmap` entirely.
This is the number of contiguous unsigned longs from the very first bit of the bitmap (even if unset) up to the last set bit. This is useful for knowing the `nr` parameter to pass to hwloc_bitmap_to_ulongs() (or which calls to hwloc_bitmap_to_ith_ulong() are needed) to entirely convert a bitmap into multiple unsigned longs.
When called on the output of hwloc_topology_get_topology_cpuset(), the returned number is large enough for all cpusets of the topology.

Returns

the number of unsigned longs required.

-1 if `bitmap` is infinite.

23.25.4.35 hwloc_bitmap_only()

```
int hwloc_bitmap_only (
            hwloc_bitmap_t bitmap,
            unsigned id )
```

Empty the bitmap `bitmap` and add bit `id`.

23.25.4.36 hwloc_bitmap_or()

```
int hwloc_bitmap_or (
            hwloc_bitmap_t res,
            hwloc_const_bitmap_t bitmap1,
            hwloc_const_bitmap_t bitmap2 )
```

Or bitmaps `bitmap1` and `bitmap2` and store the result in bitmap `res`.
`res` can be the same as `bitmap1` or `bitmap2`

23.25.4.37 hwloc_bitmap_set()

```
int hwloc_bitmap_set (
            hwloc_bitmap_t bitmap,
            unsigned id )
```

Add index `id` in bitmap `bitmap`.

23.25.4.38 hwloc_bitmap_set_ith_ulong()

```
int hwloc_bitmap_set_ith_ulong (
            hwloc_bitmap_t bitmap,
            unsigned i,
            unsigned long mask )
```

Replace `i` -th subset of bitmap `bitmap` with unsigned long `mask`.

23.25.4.39 hwloc_bitmap_set_range()

```
int hwloc_bitmap_set_range (
            hwloc_bitmap_t bitmap,
            unsigned begin,
            int end )
```

Add indexes from `begin` to `end` in bitmap `bitmap`.
If `end` is `-1`, the range is infinite.

23.25.4.40 hwloc_bitmap_singlify()

```
int hwloc_bitmap_singlify (
            hwloc_bitmap_t bitmap )
```

Keep a single index among those set in bitmap `bitmap`.
May be useful before binding so that the process does not have a chance of migrating between multiple processors in the original mask. Instead of running the task on any PU inside the given CPU set, the operating system scheduler will be forced to run it on a single of these PUs. It avoids a migration overhead and cache-line ping-pongs between PUs.

Note

This function is NOT meant to distribute multiple processes within a single CPU set. It always return the same single bit when called multiple times on the same input set. hwloc_distrib() may be used for generating CPU sets to distribute multiple tasks below a single multi-PU object.

This function cannot be applied to an object set directly. It should be applied to a copy (which may be obtained with hwloc_bitmap_dup()).

23.25.4.41 hwloc_bitmap_snprintf()

```
int hwloc_bitmap_snprintf (
            char *restrict buf,
            size_t buflen,
            hwloc_const_bitmap_t bitmap )
```

Stringify a bitmap.
Up to `buflen` characters may be written in buffer `buf`.
If `buflen` is 0, `buf` may safely be `NULL`.

Returns

the number of characters that were actually written if not truncating, or that would have been written (not including the ending \0).

23.25.4.42 hwloc_bitmap_sscanf()

```
int hwloc_bitmap_sscanf (
            hwloc_bitmap_t bitmap,
            const char *restrict string )
```

Parse a bitmap string and stores it in bitmap `bitmap`.

Returns

0 on success, -1 on error.

23.25.4.43 hwloc_bitmap_taskset_asprintf()

```
int hwloc_bitmap_taskset_asprintf (
            char ** strp,
            hwloc_const_bitmap_t bitmap )
```

Stringify a bitmap into a newly allocated taskset-specific string.

Returns

0 on success, -1 on error.

23.25.4.44 hwloc_bitmap_taskset_snprintf()

```
int hwloc_bitmap_taskset_snprintf (
            char *restrict buf,
            size_t buflen,
            hwloc_const_bitmap_t bitmap )
```

Stringify a bitmap in the taskset-specific format.
The taskset command manipulates bitmap strings that contain a single (possible very long) hexadecimal number starting with 0x.
Up to `buflen` characters may be written in buffer `buf`.
If `buflen` is 0, `buf` may safely be `NULL`.

Returns

the number of characters that were actually written if not truncating, or that would have been written (not including the ending \0).

23.25.4.45 hwloc_bitmap_taskset_sscanf()

```
int hwloc_bitmap_taskset_sscanf (
            hwloc_bitmap_t bitmap,
            const char *restrict string )
```

Parse a taskset-specific bitmap string and stores it in bitmap `bitmap`.

Returns

0 on success, -1 on error.

23.25.4.46 hwloc_bitmap_to_ith_ulong()

```
unsigned long hwloc_bitmap_to_ith_ulong (
            hwloc_const_bitmap_t bitmap,
            unsigned i )
```

Convert the `i` -th subset of bitmap `bitmap` into unsigned long mask.

23.25.4.47 hwloc_bitmap_to_ulong()

```
unsigned long hwloc_bitmap_to_ulong (
            hwloc_const_bitmap_t bitmap )
```

Convert the beginning part of bitmap `bitmap` into unsigned long `mask`.

23.25.4.48 hwloc_bitmap_to_ulongs()

```
int hwloc_bitmap_to_ulongs (
            hwloc_const_bitmap_t bitmap,
            unsigned nr,
            unsigned long * masks )
```

Convert the first `nr` subsets of bitmap `bitmap` into the array of `nr` unsigned long `masks`.
`nr` may be determined earlier with hwloc_bitmap_nr_ulongs().

Returns

0

23.25.4.49 hwloc_bitmap_weight()

```
int hwloc_bitmap_weight (
            hwloc_const_bitmap_t bitmap )
```

Compute the "weight" of bitmap `bitmap` (i.e., number of indexes that are in the bitmap).

Returns

the number of indexes that are in the bitmap.

-1 if `bitmap` is infinitely set.

23.25.4.50 hwloc_bitmap_xor()

```
int hwloc_bitmap_xor (
            hwloc_bitmap_t res,
            hwloc_const_bitmap_t bitmap1,
            hwloc_const_bitmap_t bitmap2 )
```

Xor bitmaps `bitmap1` and `bitmap2` and store the result in bitmap `res`.
`res` can be the same as `bitmap1` or `bitmap2`

23.25.4.51 hwloc_bitmap_zero()

```
void hwloc_bitmap_zero (
            hwloc_bitmap_t bitmap )
```

Empty the bitmap `bitmap`.

23.26 Exporting Topologies to XML

Enumerations

- enum hwloc_topology_export_xml_flags_e { HWLOC_TOPOLOGY_EXPORT_XML_FLAG_V2 }

Functions

- int hwloc_topology_export_xml (hwloc_topology_t topology, const char ∗xmlpath, unsigned long flags)
- int hwloc_topology_export_xmlbuffer (hwloc_topology_t topology, char ∗∗xmlbuffer, int ∗buflen, unsigned long flags)
- void hwloc_free_xmlbuffer (hwloc_topology_t topology, char ∗xmlbuffer)
- void hwloc_topology_set_userdata_export_callback (hwloc_topology_t topology, void(∗export_cb)(void ∗reserved, hwloc_topology_t topology, hwloc_obj_t obj))
- int hwloc_export_obj_userdata (void ∗reserved, hwloc_topology_t topology, hwloc_obj_t obj, const char ∗name, const void ∗buffer, size_t length)
- int hwloc_export_obj_userdata_base64 (void ∗reserved, hwloc_topology_t topology, hwloc_obj_t obj, const char ∗name, const void ∗buffer, size_t length)
- void hwloc_topology_set_userdata_import_callback (hwloc_topology_t topology, void(∗import_cb)(hwloc_topology_t topology, hwloc_obj_t obj, const char ∗name, const void ∗buffer, size_t length))

23.26.1 Detailed Description

23.26.2 Enumeration Type Documentation

23.26.2.1 hwloc_topology_export_xml_flags_e

`enum hwloc_topology_export_xml_flags_e`

Flags for exporting XML topologies.

Flags to be given as a OR'ed set to hwloc_topology_export_xml().

Enumerator

HWLOC_TOPOLOGY_EXPORT_XML_FLAG_V2	Export XML that is loadable by hwloc v2.x. However, the export may miss some details about the topology.

23.26.3 Function Documentation

23.26.3.1 hwloc_export_obj_userdata()

```
int hwloc_export_obj_userdata (
            void * reserved,
            hwloc_topology_t topology,
            hwloc_obj_t obj,
            const char * name,
            const void * buffer,
            size_t length )
```

Export some object userdata to XML.

This function may only be called from within the export() callback passed to hwloc_topology_set_userdata_export_callback(). It may be invoked one of multiple times to export some userdata to XML. The `buffer` content of length `length` is stored with optional name `name`.

When importing this XML file, the import() callback (if set) will be called exactly as many times as hwloc_export_obj_userdata() was called during export(). It will receive the corresponding `name`, `buffer` and `length` arguments.

`reserved`, `topology` and `obj` must be the first three parameters that were given to the export callback.
Only printable characters may be exported to XML string attributes.
If exporting binary data, the application should first encode into printable characters only (or use hwloc_export_obj_userdata_base64()).
It should also take care of portability issues if the export may be reimported on a different architecture.

Returns

0 on success.

-1 with errno set to `EINVAL` if a non-printable character is passed in `name` or **buffer**.

23.26.3.2 hwloc_export_obj_userdata_base64()

```
int hwloc_export_obj_userdata_base64 (
            void * reserved,
            hwloc_topology_t topology,
            hwloc_obj_t obj,
            const char * name,
            const void * buffer,
            size_t length )
```

Encode and export some object userdata to XML.
This function is similar to hwloc_export_obj_userdata() but it encodes the input buffer into printable characters before exporting. On import, decoding is automatically performed before the data is given to the import() callback if any.
This function may only be called from within the export() callback passed to hwloc_topology_set_userdata_export_callback().
The name must be made of printable characters for export to XML string attributes.
The function does not take care of portability issues if the export may be reimported on a different architecture.

Returns

0 on success.

-1 with errno set to `EINVAL` if a non-printable character is passed in `name`.

23.26.3.3 hwloc_free_xmlbuffer()

```
void hwloc_free_xmlbuffer (
            hwloc_topology_t topology,
            char * xmlbuffer )
```

Free a buffer allocated by hwloc_topology_export_xmlbuffer()

23.26.3.4 hwloc_topology_export_xml()

```
int hwloc_topology_export_xml (
            hwloc_topology_t topology,
            const char * xmlpath,
            unsigned long flags )
```

Export the topology into an XML file.
This file may be loaded later through hwloc_topology_set_xml().
By default, the latest export format is used, which means older hwloc releases (e.g. v2.x) may not be able to import it. Exporting to v2.x specific XML format is possible using flag HWLOC_TOPOLOGY_EXPORT_XML_FLAG_V2 but it may miss some details about the topology. If there is any chance that the exported file may ever be imported back by a process using hwloc 2.x, one should consider detecting it at runtime and using the corresponding export format.
`flags` is a OR'ed set of hwloc_topology_export_xml_flags_e.

Returns

0 on success, or -1 on error.

Note

See also hwloc_topology_set_userdata_export_callback() for exporting application-specific object userdata.

The topology-specific userdata pointer is ignored when exporting to XML.

Only printable characters may be exported to XML string attributes. Any other character, especially any non-ASCII character, will be silently dropped.

If `name` is "-", the XML output is sent to the standard output.

23.26.3.5 hwloc_topology_export_xmlbuffer()

```
int hwloc_topology_export_xmlbuffer (
            hwloc_topology_t topology,
            char ** xmlbuffer,
            int * buflen,
            unsigned long flags )
```

Export the topology into a newly-allocated XML memory buffer.
`xmlbuffer` is allocated by the callee and should be freed with hwloc_free_xmlbuffer() later in the caller.
This memory buffer may be loaded later through hwloc_topology_set_xmlbuffer().
By default, the latest export format is used, which means older hwloc releases (e.g. v2.x) may not be able to import it. Exporting to v2.x specific XML format is possible using flag HWLOC_TOPOLOGY_EXPORT_XML_FLAG_V2 but it may miss some details about the topology. If there is any chance that the exported buffer may ever be imported back by a process using hwloc 2.x, one should consider detecting it at runtime and using the corresponding export format.
The returned buffer ends with a \0 that is included in the returned length.
`flags` is a OR'ed set of hwloc_topology_export_xml_flags_e.

Returns

0 on success, or -1 on error.

Note

See also hwloc_topology_set_userdata_export_callback() for exporting application-specific object userdata.

The topology-specific userdata pointer is ignored when exporting to XML.

Only printable characters may be exported to XML string attributes. Any other character, especially any non-ASCII character, will be silently dropped.

23.26.3.6 hwloc_topology_set_userdata_export_callback()

```
void hwloc_topology_set_userdata_export_callback (
            hwloc_topology_t topology,
            void(*)(void *reserved, hwloc_topology_t topology, hwloc_obj_t obj) export_cb )
```

Set the application-specific callback for exporting object userdata.
The object userdata pointer is not exported to XML by default because hwloc does not know what it contains.
This function lets applications set `export_cb` to a callback function that converts this opaque userdata into an exportable string.
`export_cb` is invoked during XML export for each object whose `userdata` pointer is not `NULL`. The callback should use hwloc_export_obj_userdata() or hwloc_export_obj_userdata_base64() to actually export something to XML (possibly multiple times per object).
`export_cb` may be set to `NULL` if userdata should not be exported to XML.

Note

The topology-specific userdata pointer is ignored when exporting to XML.

23.26.3.7 hwloc_topology_set_userdata_import_callback()

```
void hwloc_topology_set_userdata_import_callback (
            hwloc_topology_t topology,
            void(*)(hwloc_topology_t topology, hwloc_obj_t obj, const char *name, const void
*buffer, size_t length) import_cb )
```

Set the application-specific callback for importing userdata.

On XML import, userdata is ignored by default because hwloc does not know how to store it in memory.

This function lets applications set `import_cb` to a callback function that will get the XML-stored userdata and store it in the object as expected by the application.

`import_cb` is called during hwloc_topology_load() as many times as hwloc_export_obj_userdata() was called during export. The topology is not entirely setup yet. Object attributes are ready to consult, but links between objects are not.

`import_cb` may be `NULL` if userdata should be ignored during import.

Note

`buffer` contains `length` characters followed by a null byte ('\0').

This function should be called before hwloc_topology_load().

The topology-specific userdata pointer is ignored when importing from XML.

23.27 Exporting Topologies to Synthetic

Enumerations

- enum hwloc_topology_export_synthetic_flags_e { HWLOC_TOPOLOGY_EXPORT_SYNTHETIC_FLAG_NO_EXTENDED_TY HWLOC_TOPOLOGY_EXPORT_SYNTHETIC_FLAG_NO_ATTRS, HWLOC_TOPOLOGY_EXPORT_SYNTHETIC_FLAG_V1 HWLOC_TOPOLOGY_EXPORT_SYNTHETIC_FLAG_IGNORE_MEMORY }

Functions

- int hwloc_topology_export_synthetic (hwloc_topology_t topology, char *buffer, size_t buflen, unsigned long flags)

23.27.1 Detailed Description

23.27.2 Enumeration Type Documentation

23.27.2.1 hwloc_topology_export_synthetic_flags_e

`enum hwloc_topology_export_synthetic_flags_e`

Flags for exporting synthetic topologies.

Flags to be given as a OR'ed set to hwloc_topology_export_synthetic().

Enumerator

HWLOC_TOPOLOGY_EXPORT_SYNTHETIC_FL↩ AG_NO_EXTENDED_TYPES	Export extended types such as L2dcache as basic types such as Cache. This is required if loading the synthetic description with hwloc < 1.9.
HWLOC_TOPOLOGY_EXPORT_SYNTHETIC_FL↩ AG_NO_ATTRS	Do not export level attributes. Ignore level attributes such as memory/cache sizes or PU indexes. This is required if loading the synthetic description with hwloc < 1.10.
HWLOC_TOPOLOGY_EXPORT_SYNTHETIC_FL↩ AG_V1	Export the memory hierarchy as expected in hwloc 1.x. Instead of attaching memory children to levels, export single NUMA node child as normal intermediate levels, when possible. This is required if loading the synthetic description with hwloc 1.x. However this may fail if some objects have multiple local NUMA nodes.
HWLOC_TOPOLOGY_EXPORT_SYNTHETIC_FL↩ AG_IGNORE_MEMORY	Do not export memory information. Only export the actual hierarchy of normal CPU-side objects and ignore where memory is attached. This is useful for when the hierarchy of CPUs is what really matters, but it behaves as if there was a single machine-wide NUMA node.

23.27.3 Function Documentation

23.27.3.1 hwloc_topology_export_synthetic()

```
int hwloc_topology_export_synthetic (
            hwloc_topology_t topology,
            char * buffer,
```

```
size_t buflen,
unsigned long flags )
```

Export the topology as a synthetic string.
At most `buflen` characters will be written in `buffer`, including the terminating \0.
This exported string may be given back to hwloc_topology_set_synthetic().
`flags` is a OR'ed set of hwloc_topology_export_synthetic_flags_e.

Returns

The number of characters that were written, not including the terminating \0.

-1 if the topology could not be exported, for instance if it is not symmetric.

Note

I/O and Misc children are ignored, the synthetic string only describes normal children.

A 1024-byte buffer should be large enough for exporting topologies in the vast majority of cases.

23.28 Retrieve distances between objects

Data Structures

- struct hwloc_distances_s

Enumerations

- enum hwloc_distances_kind_e { HWLOC_DISTANCES_KIND_FROM_OS, HWLOC_DISTANCES_KIND_FROM_USER, HWLOC_DISTANCES_KIND_VALUE HWLOC_DISTANCES_KIND_VALUE_BANDWIDTH, HWLOC_DISTANCES_KIND_VALUE_HOPS, HWLOC_DISTANCES_KIND_HETEROGENEOUS_TYPES }
- enum hwloc_distances_transform_e { HWLOC_DISTANCES_TRANSFORM_REMOVE_NULL, HWLOC_DISTANCES_TRANS HWLOC_DISTANCES_TRANSFORM_MERGE_SWITCH_PORTS, HWLOC_DISTANCES_TRANSFORM_TRANSITIVE_CLO }

Functions

- int hwloc_distances_get (hwloc_topology_t topology, unsigned *nr, struct hwloc_distances_s **distances, unsigned long kind, unsigned long flags)
- int hwloc_distances_get_by_depth (hwloc_topology_t topology, int depth, unsigned *nr, struct hwloc_distances_s **distances, unsigned long kind, unsigned long flags)
- int hwloc_distances_get_by_type (hwloc_topology_t topology, hwloc_obj_type_t type, unsigned *nr, struct hwloc_distances_s **distances, unsigned long kind, unsigned long flags)
- int hwloc_distances_get_by_name (hwloc_topology_t topology, const char *name, unsigned *nr, struct hwloc_distances_s **distances, unsigned long flags)
- const char * hwloc_distances_get_name (hwloc_topology_t topology, struct hwloc_distances_s *distances)
- void hwloc_distances_release (hwloc_topology_t topology, struct hwloc_distances_s *distances)
- int hwloc_distances_transform (hwloc_topology_t topology, struct hwloc_distances_s *distances, enum hwloc_distances_transform_e transform, void *transform_attr, unsigned long flags)

23.28.1 Detailed Description

23.28.2 Enumeration Type Documentation

23.28.2.1 hwloc_distances_kind_e

`enum hwloc_distances_kind_e`

Kinds of distance matrices.

The `kind` attribute of struct hwloc_distances_s is a OR'ed set of kinds.

Each distance matrix may have only one kind among HWLOC_DISTANCES_KIND_FROM_* specifying where distance information comes from, and one kind among HWLOC_DISTANCES_KIND_VALUE_* specifying and exactly one kind HWLOC_DISTANCES_KIND_VALUE_* specifying whether values are latencies or bandwidths, etc.

Enumerator

HWLOC_DISTANCES_KIND_FROM_OS	These distances were obtained from the operating system or hardware.
HWLOC_DISTANCES_KIND_FROM_USER	These distances were provided by the user.
HWLOC_DISTANCES_KIND_VALUE_LATENCY	Distance values are similar to latencies between objects. Values are smaller for closer objects, hence minimal on the diagonal of the matrix (distance between an object and itself).

Enumerator

HWLOC_DISTANCES_KIND_VALUE_BANDWIDTH	Distance values are similar to bandwidths between objects. Values are higher for closer objects, hence maximal on the diagonal of the matrix (distance between an object and itself). Such values are currently ignored for distance-based grouping.
HWLOC_DISTANCES_KIND_VALUE_HOPS	Distance values are numbers of hops between objects. Values are smaller for closer objects, zero on the diagonal of the matrix (no hop between an object and itself).
HWLOC_DISTANCES_KIND_HETEROGENEOUS_TYPES	This distances structure covers objects of different types. This may apply to the "NVLinkBandwidth" structure in presence of a NVSwitch or POWER processor NVLink port.

23.28.2.2 hwloc_distances_transform_e

`enum hwloc_distances_transform_e`

Transformations of distances structures.

Enumerator

HWLOC_DISTANCES_TRANSFORM_REMOVE_NULL	Remove `NULL` objects from the distances structure. Every object that was replaced with `NULL` in the `objs` array is removed and the `values` array is updated accordingly. At least `2` objects must remain, otherwise hwloc_distances_transform() will return `-1` with `errno` set to `EINVAL`. `kind` will be updated with or without HWLOC_DISTANCES_KIND_HETEROGENEOUS_TYPES according to the remaining objects.
HWLOC_DISTANCES_TRANSFORM_LINKS	Replace bandwidth values with a number of links. Usually all values will be either `0` (no link) or `1` (one link). However some matrices could get larger values if some pairs of peers are connected by different numbers of links. Values on the diagonal are set to `0`. This transformation only applies to bandwidth matrices.
HWLOC_DISTANCES_TRANSFORM_MERGE_SWITCH_PORTS	Merge switches with multiple ports into a single object. This currently only applies to NVSwitches where GPUs seem connected to different separate switch ports in the NVLinkBandwidth matrix. This transformation will replace all of them with the same port connected to all GPUs. Other ports are removed by applying HWLOC_DISTANCES_TRANSFORM_REMOVE_NULL internally.
HWLOC_DISTANCES_TRANSFORM_TRANSITIVE_CLOSURE	Apply a transitive closure to the matrix to connect objects across switches. This currently only applies to GPUs and NVSwitches in the NVLinkBandwidth matrix. All pairs of GPUs will be reported as directly connected.

23.28.3 Function Documentation

23.28.3.1 hwloc_distances_get()

```
int hwloc_distances_get (
            hwloc_topology_t topology,
            unsigned * nr,
            struct hwloc_distances_s ** distances,
            unsigned long kind,
            unsigned long flags )
```

Retrieve distance matrices.
Retrieve distance matrices from the topology into the `distances` array.
`flags` is currently unused, should be `0`.
`kind` serves as a filter. If `0`, all distance matrices are returned. If it contains some HWLOC_DISTANCES_KIND↩_FROM_*, only distance matrices whose kind matches one of these are returned. If it contains some HWLOC_↩DISTANCES_KIND_VALUE_*, only distance matrices whose kind matches one of these are returned.
On input, `nr` points to the number of distance matrices that may be stored in `distances`. On output, `nr` points to the number of distance matrices that were actually found, even if some of them couldn't be stored in `distances`. Distance matrices that couldn't be stored are ignored, but the function still returns success (`0`). The caller may find out by comparing the value pointed by `nr` before and after the function call.
Each distance matrix returned in the `distances` array should be released by the caller using hwloc_distances_release().

Returns

0 on success, -1 on error.

23.28.3.2 hwloc_distances_get_by_depth()

```
int hwloc_distances_get_by_depth (
            hwloc_topology_t topology,
            int depth,
            unsigned * nr,
            struct hwloc_distances_s ** distances,
            unsigned long kind,
            unsigned long flags )
```

Retrieve distance matrices for object at a specific depth in the topology.
Identical to hwloc_distances_get() with the additional `depth` filter.

Returns

0 on success, -1 on error.

23.28.3.3 hwloc_distances_get_by_name()

```
int hwloc_distances_get_by_name (
            hwloc_topology_t topology,
            const char * name,
            unsigned * nr,
            struct hwloc_distances_s ** distances,
            unsigned long flags )
```

Retrieve a distance matrix with the given name.
Usually only one distances structure may match a given name.
The name of the most common structure is "NUMALatency". Others include "XGMIBandwidth", "XGMIHops", "↩XeLinkBandwidth", and "NVLinkBandwidth".

Returns

0 on success, -1 on error.

23.28.3.4 hwloc_distances_get_by_type()

```
int hwloc_distances_get_by_type (
            hwloc_topology_t topology,
            hwloc_obj_type_t type,
            unsigned * nr,
            struct hwloc_distances_s ** distances,
            unsigned long kind,
            unsigned long flags )
```

Retrieve distance matrices for object of a specific type.
Identical to hwloc_distances_get() with the additional `type` filter.

Returns

0 on success, -1 on error.

23.28.3.5 hwloc_distances_get_name()

```
const char* hwloc_distances_get_name (
            hwloc_topology_t topology,
            struct hwloc_distances_s * distances )
```

Get a description of what a distances structure contains.
For instance "NUMALatency" for hardware-provided NUMA distances (ACPI SLIT), or `NULL` if unknown.

Returns

the constant string with the name of the distance structure.

Note

The returned name should not be freed by the caller, it belongs to the hwloc library.

23.28.3.6 hwloc_distances_release()

```
void hwloc_distances_release (
            hwloc_topology_t topology,
            struct hwloc_distances_s * distances )
```

Release a distance matrix structure previously returned by hwloc_distances_get().

Note

This function is not required if the structure is removed with hwloc_distances_release_remove().

23.28.3.7 hwloc_distances_transform()

```
int hwloc_distances_transform (
            hwloc_topology_t topology,
            struct hwloc_distances_s * distances,
            enum hwloc_distances_transform_e transform,
            void * transform_attr,
            unsigned long flags )
```

Apply a transformation to a distances structure.

Modify a distances structure that was previously obtained with hwloc_distances_get() or one of its variants.
This modifies the local copy of the distances structures but does not modify the distances information stored inside the topology (retrieved by another call to hwloc_distances_get() or exported to XML). To do so, one should add a new distances structure with same name, kind, objects and values (see Add distances between objects) and then remove this old one with hwloc_distances_release_remove().
`transform` must be one of the transformations listed in hwloc_distances_transform_e.
These transformations may modify the contents of the `objs` or `values` arrays.
`transform_attr` must be `NULL` for now.
`flags` must be `0` for now.

Returns

0 on success, -1 on error for instance if flags are invalid.

Note

Objects in distances array `objs` may be directly modified in place without using hwloc_distances_transform().
One may use hwloc_get_obj_with_same_locality() to easily convert between similar objects of different types.

23.29 Helpers for consulting distance matrices

Functions

- static int hwloc_distances_obj_index (struct hwloc_distances_s ∗distances, hwloc_obj_t obj)
- static int hwloc_distances_obj_pair_values (struct hwloc_distances_s ∗distances, hwloc_obj_t obj1, hwloc_obj_t obj2, hwloc_uint64_t ∗value1to2, hwloc_uint64_t ∗value2to1)

23.29.1 Detailed Description

23.29.2 Function Documentation

23.29.2.1 hwloc_distances_obj_index()

```
static int hwloc_distances_obj_index (
            struct hwloc_distances_s * distances,
            hwloc_obj_t obj )  [inline], [static]
```

Find the index of an object in a distances structure.

Returns

the index of the object in the distances structure if any.

-1 if object `obj` is not involved in structure `distances`.

23.29.2.2 hwloc_distances_obj_pair_values()

```
static int hwloc_distances_obj_pair_values (
            struct hwloc_distances_s * distances,
            hwloc_obj_t obj1,
            hwloc_obj_t obj2,
            hwloc_uint64_t * value1to2,
            hwloc_uint64_t * value2to1 )  [inline], [static]
```

Find the values between two objects in a distance matrices.
The distance from `obj1` to `obj2` is stored in the value pointed by `value1to2` and reciprocally.

Returns

0 on success.

-1 if object `obj1` or `obj2` is not involved in structure `distances`.

23.30 Add distances between objects

Typedefs

- typedef void * hwloc_distances_add_handle_t

Enumerations

- enum hwloc_distances_add_flag_e { HWLOC_DISTANCES_ADD_FLAG_GROUP, HWLOC_DISTANCES_ADD_FLAG_GROU
  }

Functions

- hwloc_distances_add_handle_t hwloc_distances_add_create (hwloc_topology_t topology, const char *name, unsigned long kind, unsigned long flags)
- int hwloc_distances_add_values (hwloc_topology_t topology, hwloc_distances_add_handle_t handle, unsigned nbobjs, hwloc_obj_t *objs, hwloc_uint64_t *values, unsigned long flags)
- int hwloc_distances_add_commit (hwloc_topology_t topology, hwloc_distances_add_handle_t handle, unsigned long flags)

23.30.1 Detailed Description

The usual way to add distances is:

```
hwloc_distances_add_handle_t handle;
int err = -1;
handle = hwloc_distances_add_create(topology, "name", kind, 0);
if (handle) {
  err = hwloc_distances_add_values(topology, handle, nbobjs, objs, values, 0);
  if (!err)
    err = hwloc_distances_add_commit(topology, handle, flags);
}
```

If `err` is `0` at the end, then addition was successful.

23.30.2 Typedef Documentation

23.30.2.1 hwloc_distances_add_handle_t

`typedef void* hwloc_distances_add_handle_t`

Handle to a new distances structure during its addition to the topology.

23.30.3 Enumeration Type Documentation

23.30.3.1 hwloc_distances_add_flag_e

`enum hwloc_distances_add_flag_e`

Flags for adding a new distances to a topology.

Enumerator

HWLOC_DISTANCES_ADD_FLAG_GROUP	Try to group objects based on the newly provided distance information. Grouping is only performed when the distances structure contains latencies or hops, and when all objects are of the same type.

Enumerator

HWLOC_DISTANCES_ADD_FLAG_GROUP_INACCURATE	If grouping, consider the distance values as inaccurate and relax the comparisons during the grouping algorithms. The actual accuracy may be modified through the HWLOC_GROUPING_ACCURACY environment variable (see Environment Variables).

23.30.4 Function Documentation

23.30.4.1 hwloc_distances_add_commit()

```
int hwloc_distances_add_commit (
            hwloc_topology_t topology,
            hwloc_distances_add_handle_t handle,
            unsigned long flags )
```

Commit a new distances structure.

This function finalizes the distances structure and inserts in it the topology.

Parameter `handle` was previously returned by hwloc_distances_add_create(). Then objects and values were specified with hwloc_distances_add_values().

`flags` configures the behavior of the function using an optional OR'ed set of hwloc_distances_add_flag_e. It may be used to request the grouping of existing objects based on distances.

On error, the temporary distances structure and its content are destroyed.

Returns

0 on success.

-1 on error.

23.30.4.2 hwloc_distances_add_create()

```
hwloc_distances_add_handle_t hwloc_distances_add_create (
            hwloc_topology_t topology,
            const char * name,
            unsigned long kind,
            unsigned long flags )
```

Create a new empty distances structure.

Create an empty distances structure to be filled with hwloc_distances_add_values() and then committed with hwloc_distances_add_commit().

Parameter `name` is optional, it may be `NULL`. Otherwise, it will be copied internally and may later be freed by the caller.

`kind` specifies the kind of distance as a OR'ed set of hwloc_distances_kind_e. Only one kind of meaning and one kind of provenance may be given if appropriate (e.g. HWLOC_DISTANCES_KIND_VALUE_BANDWIDTH and HWLOC_DISTANCES_KIND_FROM_USER). Kind HWLOC_DISTANCES_KIND_HETEROGENEOUS_TYPES will be automatically set according to objects having different types in hwloc_distances_add_values().

`flags` must be `0` for now.

Returns

A hwloc_distances_add_handle_t that should then be passed to hwloc_distances_add_values() and hwloc_distances_add_commit().

`NULL` on error.

23.30.4.3 hwloc_distances_add_values()

```
int hwloc_distances_add_values (
            hwloc_topology_t topology,
            hwloc_distances_add_handle_t handle,
            unsigned nbobjs,
            hwloc_obj_t * objs,
            hwloc_uint64_t * values,
            unsigned long flags )
```

Specify the objects and values in a new empty distances structure.
Specify the objects and values for a new distances structure that was returned as a handle by hwloc_distances_add_create().
The structure must then be committed with hwloc_distances_add_commit().
The number of objects is `nbobjs` and the array of objects is `objs`. Distance values are stored as a one-dimension array in `values`. The distance from object i to object j is in slot i∗nbobjs+j.
`nbobjs` must be at least 2.
Arrays `objs` and `values` will be copied internally, they may later be freed by the caller.
On error, the temporary distances structure and its content are destroyed.
`flags` must be `0` for now.

Returns

0 on success.

-1 on error.

23.31 Remove distances between objects

Functions

- int hwloc_distances_remove (hwloc_topology_t topology)
- int hwloc_distances_remove_by_depth (hwloc_topology_t topology, int depth)
- static int hwloc_distances_remove_by_type (hwloc_topology_t topology, hwloc_obj_type_t type)
- int hwloc_distances_release_remove (hwloc_topology_t topology, struct hwloc_distances_s *distances)

23.31.1 Detailed Description

23.31.2 Function Documentation

23.31.2.1 hwloc_distances_release_remove()

```
int hwloc_distances_release_remove (
            hwloc_topology_t topology,
            struct hwloc_distances_s * distances )
```

Release and remove the given distance matrice from the topology.
This function includes a call to hwloc_distances_release().

Returns

0 on success, -1 on error.

23.31.2.2 hwloc_distances_remove()

```
int hwloc_distances_remove (
            hwloc_topology_t topology )
```

Remove all distance matrices from a topology.
Remove all distance matrices, either provided by the user or gathered through the OS.
If these distances were used to group objects, these additional Group objects are not removed from the topology.

Returns

0 on success, -1 on error.

23.31.2.3 hwloc_distances_remove_by_depth()

```
int hwloc_distances_remove_by_depth (
            hwloc_topology_t topology,
            int depth )
```

Remove distance matrices for objects at a specific depth in the topology.
Identical to hwloc_distances_remove() but only applies to one level of the topology.

Returns

0 on success, -1 on error.

23.31.2.4 hwloc_distances_remove_by_type()

```
static int hwloc_distances_remove_by_type (
            hwloc_topology_t topology,
            hwloc_obj_type_t type )  [inline], [static]
```

Remove distance matrices for objects of a specific type in the topology.
Identical to hwloc_distances_remove() but only applies to one level of the topology.

Returns

0 on success, -1 on error.

23.32 Comparing memory node attributes for finding where to allocate on

Data Structures

- struct hwloc_location

Typedefs

- typedef unsigned hwloc_memattr_id_t

Enumerations

- enum hwloc_memattr_id_e { HWLOC_MEMATTR_ID_CAPACITY, HWLOC_MEMATTR_ID_LOCALITY, HWLOC_MEMATTR_ID_BANDWIDTH, HWLOC_MEMATTR_ID_READ_BANDWIDTH, HWLOC_MEMATTR_ID_WRITE_BANDWIDTH, HWLOC_MEMATTR_ID_LATENCY, HWLOC_MEMATTR_ID_READ_LATEN HWLOC_MEMATTR_ID_WRITE_LATENCY }
- enum hwloc_location_type_e { HWLOC_LOCATION_TYPE_CPUSET, HWLOC_LOCATION_TYPE_OBJECT }
- enum hwloc_local_numanode_flag_e { HWLOC_LOCAL_NUMANODE_FLAG_LARGER_LOCALITY, HWLOC_LOCAL_NUMANODE_FLAG_SMALLER_LOCALITY, HWLOC_LOCAL_NUMANODE_FLAG_ALL }

Functions

- int hwloc_memattr_get_by_name (hwloc_topology_t topology, const char *name, hwloc_memattr_id_t *id)
- int hwloc_get_local_numanode_objs (hwloc_topology_t topology, struct hwloc_location *location, unsigned *nr, hwloc_obj_t *nodes, unsigned long flags)
- int hwloc_memattr_get_value (hwloc_topology_t topology, hwloc_memattr_id_t attribute, hwloc_obj_t target_node, struct hwloc_location *initiator, unsigned long flags, hwloc_uint64_t *value)
- int hwloc_memattr_get_best_target (hwloc_topology_t topology, hwloc_memattr_id_t attribute, struct hwloc_location *initiator, unsigned long flags, hwloc_obj_t *best_target, hwloc_uint64_t *value)
- int hwloc_memattr_get_best_initiator (hwloc_topology_t topology, hwloc_memattr_id_t attribute, hwloc_obj_t target, unsigned long flags, struct hwloc_location *best_initiator, hwloc_uint64_t *value)

23.32.1 Detailed Description

Platforms with heterogeneous memory require ways to decide whether a buffer should be allocated on "fast" memory (such as HBM), "normal" memory (DDR) or even "slow" but large-capacity memory (non-volatile memory). These memory nodes are called "Targets" while the CPU accessing them is called the "Initiator". Access performance depends on their locality (NUMA platforms) as well as the intrinsic performance of the targets (heterogeneous platforms).

The following attributes describe the performance of memory accesses from an Initiator to a memory Target, for instance their latency or bandwidth. Initiators performing these memory accesses are usually some PUs or Cores (described as a CPU set). Hence a Core may choose where to allocate a memory buffer by comparing the attributes of different target memory nodes nearby.

There are also some attributes that are system-wide. Their value does not depend on a specific initiator performing an access. The memory node Capacity is an example of such attribute without initiator.

One way to use this API is to start with a cpuset describing the Cores where a program is bound. The best target NUMA node for allocating memory in this program on these Cores may be obtained by passing this cpuset as an initiator to hwloc_memattr_get_best_target() with the relevant memory attribute. For instance, if the code is latency limited, use the Latency attribute.

A more flexible approach consists in getting the list of local NUMA nodes by passing this cpuset to hwloc_get_local_numanode_objs(). Attribute values for these nodes, if any, may then be obtained with hwloc_memattr_get_value() and manually compared with the desired criteria.

Memory attributes are also used internally to build Memory Tiers which provide an easy way to distinguish NUMA nodes of different kinds, as explained in Heterogeneous Memory.

See also

An example is available in doc/examples/memory-attributes.c in the source tree.

Note

The API also supports specific objects as initiator, but it is currently not used internally by hwloc. Users may for instance use it to provide custom performance values for host memory accesses performed by GPUs.

The interface actually also accepts targets that are not NUMA nodes.

23.32.2 Typedef Documentation

23.32.2.1 hwloc_memattr_id_t

`typedef unsigned hwloc_memattr_id_t`

A memory attribute identifier. May be either one of hwloc_memattr_id_e or a new id returned by hwloc_memattr_register().

23.32.3 Enumeration Type Documentation

23.32.3.1 hwloc_local_numanode_flag_e

`enum hwloc_local_numanode_flag_e`

Flags for selecting target NUMA nodes.

Enumerator

HWLOC_LOCAL_NUMANODE_FLAG_LARGER_LOCALITY	Select NUMA nodes whose locality is larger than the given cpuset. For instance, if a single PU (or its cpuset) is given in `initiator`, select all nodes close to the package that contains this PU.
HWLOC_LOCAL_NUMANODE_FLAG_SMALLER_LOCALITY	Select NUMA nodes whose locality is smaller than the given cpuset. For instance, if a package (or its cpuset) is given in `initiator`, also select nodes that are attached to only a half of that package.
HWLOC_LOCAL_NUMANODE_FLAG_ALL	Select all NUMA nodes in the topology. The initiator `initiator` is ignored.

23.32.3.2 hwloc_location_type_e

`enum hwloc_location_type_e`

Type of location.

Enumerator

HWLOC_LOCATION_TYPE_CPUSET	Location is given as a cpuset, in the location cpuset union field.
HWLOC_LOCATION_TYPE_OBJECT	Location is given as an object, in the location object union field.

23.32.3.3 hwloc_memattr_id_e

`enum hwloc_memattr_id_e`

Memory node attributes.

Enumerator

HWLOC_MEMATTR_ID_CAPACITY	The "Capacity" is returned in bytes (local_memory attribute in objects). Best capacity nodes are nodes with **higher capacity**. No initiator is involved when looking at this attribute. The corresponding attribute flags are HWLOC_MEMATTR_FLAG_HIGHER_FIRST.
HWLOC_MEMATTR_ID_LOCALITY	The "Locality" is returned as the number of PUs in that locality (e.g. the weight of its cpuset). Best locality nodes are nodes with **smaller locality** (nodes that are local to very few PUs). Poor locality nodes are nodes with larger locality (nodes that are local to the entire machine). No initiator is involved when looking at this attribute. The corresponding attribute flags are HWLOC_MEMATTR_FLAG_HIGHER_FIRST.
HWLOC_MEMATTR_ID_BANDWIDTH	The "Bandwidth" is returned in MiB/s, as seen from the given initiator location. Best bandwidth nodes are nodes with **higher bandwidth**. The corresponding attribute flags are HWLOC_MEMATTR_FLAG_HIGHER_FIRST and HWLOC_MEMATTR_FLAG_NEED_INITIATOR. This is the average bandwidth for read and write accesses. If the platform provides individual read and write bandwidths but no explicit average value, hwloc computes and returns the average.
HWLOC_MEMATTR_ID_READ_BANDWIDTH	The "ReadBandwidth" is returned in MiB/s, as seen from the given initiator location. Best bandwidth nodes are nodes with **higher bandwidth**. The corresponding attribute flags are HWLOC_MEMATTR_FLAG_HIGHER_FIRST and HWLOC_MEMATTR_FLAG_NEED_INITIATOR.
HWLOC_MEMATTR_ID_WRITE_BANDWIDTH	The "WriteBandwidth" is returned in MiB/s, as seen from the given initiator location. Best bandwidth nodes are nodes with **higher bandwidth**. The corresponding attribute flags are HWLOC_MEMATTR_FLAG_HIGHER_FIRST and HWLOC_MEMATTR_FLAG_NEED_INITIATOR.
HWLOC_MEMATTR_ID_LATENCY	The "Latency" is returned as nanoseconds, as seen from the given initiator location. Best latency nodes are nodes with **smaller latency**. The corresponding attribute flags are HWLOC_MEMATTR_FLAG_LOWER_FIRST and HWLOC_MEMATTR_FLAG_NEED_INITIATOR. This is the average latency for read and write accesses. If the platform provides individual read and write latencies but no explicit average value, hwloc computes and returns the average.

Enumerator

HWLOC_MEMATTR_ID_READ_LATENCY	The "ReadLatency" is returned as nanoseconds, as seen from the given initiator location. Best latency nodes are nodes with **smaller latency**. The corresponding attribute flags are HWLOC_MEMATTR_FLAG_LOWER_FIRST and HWLOC_MEMATTR_FLAG_NEED_INITIATOR.
HWLOC_MEMATTR_ID_WRITE_LATENCY	The "WriteLatency" is returned as nanoseconds, as seen from the given initiator location. Best latency nodes are nodes with **smaller latency**. The corresponding attribute flags are HWLOC_MEMATTR_FLAG_LOWER_FIRST and HWLOC_MEMATTR_FLAG_NEED_INITIATOR.

23.32.4 Function Documentation

23.32.4.1 hwloc_get_local_numanode_objs()

```
int hwloc_get_local_numanode_objs (
            hwloc_topology_t topology,
            struct hwloc_location * location,
            unsigned * nr,
            hwloc_obj_t * nodes,
            unsigned long flags )
```

Return an array of local NUMA nodes.

By default only select the NUMA nodes whose locality is exactly the given `location`. More nodes may be selected if additional flags are given as a OR'ed set of hwloc_local_numanode_flag_e.

If `location` is given as an explicit object, its CPU set is used to find NUMA nodes with the corresponding locality. If the object does not have a CPU set (e.g. I/O object), the CPU parent (where the I/O object is attached) is used.

On input, `nr` points to the number of nodes that may be stored in the `nodes` array. On output, `nr` will be changed to the number of stored nodes, or the number of nodes that would have been stored if there were enough room.

Returns

0 on success or -1 on error.

Note

Some of these NUMA nodes may not have any memory attribute values and hence not be reported as actual targets in other functions.

The number of NUMA nodes in the topology (obtained by hwloc_bitmap_weight() on the root object nodeset) may be used to allocate the `nodes` array.

When an object CPU set is given as locality, for instance a Package, and when flags contain both HWLOC_LOCAL_NUMANODE_FLAG_LARGER_LOCALITY and HWLOC_LOCAL_NUMANODE_FLAG_SMALLER_LOCALIT the returned array corresponds to the nodeset of that object.

23.32.4.2 hwloc_memattr_get_best_initiator()

```
int hwloc_memattr_get_best_initiator (
            hwloc_topology_t topology,
            hwloc_memattr_id_t attribute,
            hwloc_obj_t target,
            unsigned long flags,
```

```
struct hwloc_location * best_initiator,
hwloc_uint64_t * value )
```

Return the best initiator for the given attribute and target NUMA node.
If `value` is non `NULL`, the corresponding value is returned there.
If multiple initiators have the same attribute values, only one is returned (and there is no way to clarify how that one is chosen). Applications that want to detect initiators with identical/similar values, or that want to look at values for multiple attributes, should rather get all values using hwloc_memattr_get_value() and manually select the initiator they consider the best.
The returned initiator should not be modified or freed, it belongs to the topology.
`flags` must be `0` for now.

Returns

0 on success.

-1 with errno set to `ENOENT` if there are no matching initiators.

-1 with errno set to `EINVAL` if the attribute does not relate to a specific initiator (it does not have the flag HWLOC_MEMATTR_FLAG_NEED_INITIATOR).

23.32.4.3 hwloc_memattr_get_best_target()

```
int hwloc_memattr_get_best_target (
            hwloc_topology_t topology,
            hwloc_memattr_id_t attribute,
            struct hwloc_location * initiator,
            unsigned long flags,
            hwloc_obj_t * best_target,
            hwloc_uint64_t * value )
```

Return the best target NUMA node for the given attribute and initiator.
If the attribute does not relate to a specific initiator (it does not have the flag HWLOC_MEMATTR_FLAG_NEED_INITIATOR), location `initiator` is ignored and may be `NULL`.
If `value` is non `NULL`, the corresponding value is returned there.
If multiple targets have the same attribute values, only one is returned (and there is no way to clarify how that one is chosen). Applications that want to detect targets with identical/similar values, or that want to look at values for multiple attributes, should rather get all values using hwloc_memattr_get_value() and manually select the target they consider the best.
`flags` must be `0` for now.

Returns

0 on success.

-1 with errno set to `ENOENT` if there are no matching targets.

-1 with errno set to `EINVAL` if flags are invalid, or no such attribute exists.

Note

The initiator `initiator` should be of type HWLOC_LOCATION_TYPE_CPUSET when refering to accesses performed by CPU cores. HWLOC_LOCATION_TYPE_OBJECT is currently unused internally by hwloc, but users may for instance use it to provide custom information about host memory accesses performed by GPUs.

23.32.4.4 hwloc_memattr_get_by_name()

```
int hwloc_memattr_get_by_name (
            hwloc_topology_t topology,
            const char * name,
            hwloc_memattr_id_t * id )
```

Return the identifier of the memory attribute with the given name.

Returns

0 on success.

-1 with errno set to `EINVAL` if no such attribute exists.

23.32.4.5 hwloc_memattr_get_value()

```
int hwloc_memattr_get_value (
            hwloc_topology_t topology,
            hwloc_memattr_id_t attribute,
            hwloc_obj_t target_node,
            struct hwloc_location * initiator,
            unsigned long flags,
            hwloc_uint64_t * value )
```

Return an attribute value for a specific target NUMA node.
If the attribute does not relate to a specific initiator (it does not have the flag HWLOC_MEMATTR_FLAG_NEED_INITIATOR), location `initiator` is ignored and may be `NULL`.
`flags` must be `0` for now.

Returns

0 on success.

-1 on error, for instance with errno set to `EINVAL` if flags are invalid or no such attribute exists.

Note

The initiator `initiator` should be of type HWLOC_LOCATION_TYPE_CPUSET when refering to accesses performed by CPU cores. HWLOC_LOCATION_TYPE_OBJECT is currently unused internally by hwloc, but users may for instance use it to provide custom information about host memory accesses performed by GPUs.

23.33 Managing memory attributes

Enumerations

- enum hwloc_memattr_flag_e { HWLOC_MEMATTR_FLAG_HIGHER_FIRST = (1UL<<0), HWLOC_MEMATTR_FLAG_LOWE = (1UL<<1), HWLOC_MEMATTR_FLAG_NEED_INITIATOR = (1UL<<2) }

Functions

- int hwloc_memattr_get_name (hwloc_topology_t topology, hwloc_memattr_id_t attribute, const char **name)
- int hwloc_memattr_get_flags (hwloc_topology_t topology, hwloc_memattr_id_t attribute, unsigned long *flags)
- int hwloc_memattr_register (hwloc_topology_t topology, const char *name, unsigned long flags, hwloc_memattr_id_t *id)
- int hwloc_memattr_set_value (hwloc_topology_t topology, hwloc_memattr_id_t attribute, hwloc_obj_t target_node, struct hwloc_location *initiator, unsigned long flags, hwloc_uint64_t value)
- int hwloc_memattr_get_targets (hwloc_topology_t topology, hwloc_memattr_id_t attribute, struct hwloc_location *initiator, unsigned long flags, unsigned *nr, hwloc_obj_t *targets, hwloc_uint64_t *values)
- int hwloc_memattr_get_initiators (hwloc_topology_t topology, hwloc_memattr_id_t attribute, hwloc_obj_t target_node, unsigned long flags, unsigned *nr, struct hwloc_location *initiators, hwloc_uint64_t *values)

23.33.1 Detailed Description

23.33.2 Enumeration Type Documentation

23.33.2.1 hwloc_memattr_flag_e

enum hwloc_memattr_flag_e

Memory attribute flags. Given to hwloc_memattr_register() and returned by hwloc_memattr_get_flags().

Enumerator

HWLOC_MEMATTR_FLAG_HIGHER_FIRST	The best nodes for this memory attribute are those with the higher values. For instance Bandwidth.
HWLOC_MEMATTR_FLAG_LOWER_FIRST	The best nodes for this memory attribute are those with the lower values. For instance Latency.
HWLOC_MEMATTR_FLAG_NEED_INITIATOR	The value returned for this memory attribute depends on the given initiator. For instance Bandwidth and Latency, but not Capacity.

23.33.3 Function Documentation

23.33.3.1 hwloc_memattr_get_flags()

```
int hwloc_memattr_get_flags (
            hwloc_topology_t topology,
            hwloc_memattr_id_t attribute,
            unsigned long * flags )
```

Return the flags of the given attribute.

Flags are a OR'ed set of hwloc_memattr_flag_e.

Returns

0 on success.

-1 with errno set to `EINVAL` if the attribute does not exist.

23.33.3.2 hwloc_mematttr_get_initiators()

```
int hwloc_mematttr_get_initiators (
            hwloc_topology_t topology,
            hwloc_mematttr_id_t attribute,
            hwloc_obj_t target_node,
            unsigned long flags,
            unsigned * nr,
            struct hwloc_location * initiators,
            hwloc_uint64_t * values )
```

Return the initiators that have values for a given attribute for a specific target NUMA node.
Return initiators for the given attribute and target node in the `initiators` array. If `values` is not `NULL`, the corresponding attribute values are stored in the array it points to.
On input, `nr` points to the number of initiators that may be stored in the array `initiators` (and `values`). On output, `nr` points to the number of initiators (and values) that were actually found, even if some of them couldn't be stored in the array. Initiators that couldn't be stored are ignored, but the function still returns success (`0`). The caller may find out by comparing the value pointed by `nr` before and after the function call.
The returned initiators should not be modified or freed, they belong to the topology.
`flags` must be `0` for now.
If the attribute does not relate to a specific initiator (it does not have the flag HWLOC_MEMATTR_FLAG_NEED_INITIATOR), no initiator is returned.

Returns

0 on success or -1 on error.

Note

This function is meant for tools and debugging (listing internal information) rather than for application queries. Applications should rather select useful NUMA nodes with hwloc_get_local_numanode_objs() and then look at their attribute values for some relevant initiators.

23.33.3.3 hwloc_mematttr_get_name()

```
int hwloc_mematttr_get_name (
            hwloc_topology_t topology,
            hwloc_mematttr_id_t attribute,
            const char ** name )
```

Return the name of a memory attribute.

Returns

0 on success.

-1 with errno set to `EINVAL` if the attribute does not exist.

23.33.3.4 hwloc_mematttr_get_targets()

```
int hwloc_mematttr_get_targets (
            hwloc_topology_t topology,
            hwloc_mematttr_id_t attribute,
            struct hwloc_location * initiator,
```

```
            unsigned long flags,
            unsigned * nr,
            hwloc_obj_t * targets,
            hwloc_uint64_t * values )
```

Return the target NUMA nodes that have some values for a given attribute.

Return targets for the given attribute in the `targets` array (for the given initiator if any). If `values` is not `NULL`, the corresponding attribute values are stored in the array it points to.

On input, `nr` points to the number of targets that may be stored in the array `targets` (and `values`). On output, `nr` points to the number of targets (and values) that were actually found, even if some of them couldn't be stored in the array. Targets that couldn't be stored are ignored, but the function still returns success (`0`). The caller may find out by comparing the value pointed by `nr` before and after the function call.

The returned targets should not be modified or freed, they belong to the topology.

Argument `initiator` is ignored if the attribute does not relate to a specific initiator (it does not have the flag HWLOC_MEMATTR_FLAG_NEED_INITIATOR). Otherwise `initiator` may be non `NULL` to report only targets that have a value for that initiator.

`flags` must be `0` for now.

Note

This function is meant for tools and debugging (listing internal information) rather than for application queries. Applications should rather select useful NUMA nodes with hwloc_get_local_numanode_objs() and then look at their attribute values.

Returns

0 on success or -1 on error.

Note

The initiator `initiator` should be of type HWLOC_LOCATION_TYPE_CPUSET when referring to accesses performed by CPU cores. HWLOC_LOCATION_TYPE_OBJECT is currently unused internally by hwloc, but users may for instance use it to provide custom information about host memory accesses performed by GPUs.

23.33.3.5 hwloc_memattr_register()

```
int hwloc_memattr_register (
            hwloc_topology_t topology,
            const char * name,
            unsigned long flags,
            hwloc_memattr_id_t * id )
```

Register a new memory attribute.

Add a specific memory attribute that is not defined in hwloc_memattr_id_e. Flags are a OR'ed set of hwloc_memattr_flag_e. It must contain at least one of HWLOC_MEMATTR_FLAG_HIGHER_FIRST or HWLOC_MEMATTR_FLAG_LOWER_FIRST.

Returns

0 on success.

-1 with errno set to `EBUSY` if another attribute already uses this name.

23.33.3.6 hwloc_memattr_set_value()

```
int hwloc_memattr_set_value (
            hwloc_topology_t topology,
            hwloc_memattr_id_t attribute,
            hwloc_obj_t target_node,
```

```
struct hwloc_location * initiator,
unsigned long flags,
hwloc_uint64_t value )
```

Set an attribute value for a specific target NUMA node.
If the attribute does not relate to a specific initiator (it does not have the flag HWLOC_MEMATTR_FLAG_NEED_INITIATOR), location `initiator` is ignored and may be `NULL`.
The initiator will be copied into the topology, the caller should free anything allocated to store the initiator, for instance the cpuset.
`flags` must be `0` for now.

Note

The initiator `initiator` should be of type HWLOC_LOCATION_TYPE_CPUSET when referring to accesses performed by CPU cores. HWLOC_LOCATION_TYPE_OBJECT is currently unused internally by hwloc, but users may for instance use it to provide custom information about host memory accesses performed by GPUs.

Returns

0 on success or -1 on error.

23.34 Kinds of CPU cores

Functions

- int hwloc_cpukinds_get_nr (hwloc_topology_t topology, unsigned long flags)
- int hwloc_cpukinds_get_by_cpuset (hwloc_topology_t topology, hwloc_const_bitmap_t cpuset, unsigned long flags)
- int hwloc_cpukinds_get_info (hwloc_topology_t topology, unsigned kind_index, hwloc_bitmap_t cpuset, int *efficiency, struct hwloc_infos_s **infosp, unsigned long flags)
- int hwloc_cpukinds_register (hwloc_topology_t topology, hwloc_bitmap_t cpuset, int forced_efficiency, struct hwloc_infos_s *infos, unsigned long flags)

23.34.1 Detailed Description

Platforms with heterogeneous CPUs may have some cores with different features or frequencies. This API exposes identical PUs in sets called CPU kinds. Each PU of the topology may only be in a single kind.
The number of kinds may be obtained with hwloc_cpukinds_get_nr(). If the platform is homogeneous, there may be a single kind with all PUs. If the platform or operating system does not expose any information about CPU cores, there may be no kind at all.
The index of the kind that describes a given CPU set (if any, and not partially) may be obtained with hwloc_cpukinds_get_by_cpuset().
From the index of a kind, it is possible to retrieve information with hwloc_cpukinds_get_info(): an abstracted efficiency value, and an array of info attributes (for instance the "CoreType" and "FrequencyMaxMHz", see CPU Kinds).
A higher efficiency value means greater intrinsic performance (and possibly less performance/power efficiency). Kinds with lower efficiency values are ranked first: Passing 0 as `kind_index` to hwloc_cpukinds_get_info() will return information about the CPU kind with lower performance but higher energy-efficiency. Higher `kind_index` values would rather return information about power-hungry high-performance cores.
When available, efficiency values are gathered from the operating system. If so, `cpukind_efficiency` is set in the struct hwloc_topology_discovery_support array. This is currently available on Windows 10, Mac OS X (Darwin), and on some Linux platforms where core "capacity" is exposed in sysfs.
If the operating system does not expose core efficiencies natively, hwloc tries to compute efficiencies by comparing CPU kinds using frequencies (on ARM), or core types and frequencies (on other architectures). The environment variable HWLOC_CPUKINDS_RANKING may be used to change this heuristics, see Environment Variables.
If hwloc fails to rank any kind, for instance because the operating system does not expose efficiencies and core frequencies, all kinds will have an unknown efficiency (`-1`), and they are not indexed/ordered in any specific way.

23.34.2 Function Documentation

23.34.2.1 hwloc_cpukinds_get_by_cpuset()

```
int hwloc_cpukinds_get_by_cpuset (
            hwloc_topology_t topology,
            hwloc_const_bitmap_t cpuset,
            unsigned long flags )
```

Get the index of the CPU kind that contains CPUs listed in `cpuset`.
`flags` must be `0` for now.

Returns

The index of the CPU kind (positive integer or 0) on success.

`-1` with `errno` set to `EXDEV` if `cpuset` is only partially included in the some kind.

`-1` with `errno` set to `ENOENT` if `cpuset` is not included in any kind, even partially.

`-1` with `errno` set to `EINVAL` if parameters are invalid.

23.34.2.2 hwloc_cpukinds_get_info()

```
int hwloc_cpukinds_get_info (
            hwloc_topology_t topology,
            unsigned kind_index,
            hwloc_bitmap_t cpuset,
            int * efficiency,
            struct hwloc_infos_s ** infosp,
            unsigned long flags )
```

Get the CPU set and infos about a CPU kind in the topology.
`kind_index` identifies one kind of CPU between 0 and the number of kinds returned by hwloc_cpukinds_get_nr() minus 1.
If not `NULL`, the bitmap `cpuset` will be filled with the set of PUs of this kind.
The integer pointed by `efficiency`, if not `NULL` will, be filled with the ranking of this kind of CPU in term of efficiency (see above). It ranges from `0` to the number of kinds (as reported by hwloc_cpukinds_get_nr()) minus 1.
Kinds with lower efficiency are reported first.
If there is a single kind in the topology, its efficiency `0`. If the efficiency of some kinds of cores is unknown, the efficiency of all kinds is set to `-1`, and kinds are reported in no specific order.
If `infosp` is not `NULL`, it will receive a pointer to a structure containing the array of info attributes (for instance "CoreType", "FrequencyMaxMHz" or "FrequencyBaseMHz", see CPU Kinds) and its length. This structure belongs to the hwloc library, it should not be freed or modified.
`flags` must be `0` for now.

Returns

`0` on success.

`-1` with `errno` set to `ENOENT` if `kind_index` does not match any CPU kind.

`-1` with `errno` set to `EINVAL` if parameters are invalid.

23.34.2.3 hwloc_cpukinds_get_nr()

```
int hwloc_cpukinds_get_nr (
            hwloc_topology_t topology,
            unsigned long flags )
```

Get the number of different kinds of CPU cores in the topology.
`flags` must be `0` for now.

Returns

The number of CPU kinds (positive integer) on success.

`0` if no information about kinds was found.

`-1` with `errno` set to `EINVAL` if `flags` is invalid.

23.34.2.4 hwloc_cpukinds_register()

```
int hwloc_cpukinds_register (
            hwloc_topology_t topology,
            hwloc_bitmap_t cpuset,
            int forced_efficiency,
            struct hwloc_infos_s * infos,
            unsigned long flags )
```

Register a kind of CPU in the topology.
Mark the PUs listed in `cpuset` as being of the same kind with respect to the given attributes.
`forced_efficiency` should be `-1` if unknown. Otherwise it is an abstracted efficiency value to enforce the ranking of all kinds if all of them have valid (and different) efficiencies.
The array `infos` may be used to provide info names and values describing this kind of PUs, or it may be `NULL`.

`flags` must be `0` for now.
Parameters `cpuset` and `infos` will be duplicated internally, the caller is responsible for freeing them.
If `cpuset` overlaps with some existing kinds, those might get modified or split. For instance if existing kind A contains PUs 0 and 1, and one registers another kind for PU 1 and 2, there will be 3 resulting kinds: existing kind A is restricted to only PU 0; new kind B contains only PU 1 and combines information from A and from the newly-registered kind; new kind C contains only PU 2 and only gets information from the newly-registered kind.

Note

The efficiency `forced_efficiency` provided to this function may be different from the one reported later by hwloc_cpukinds_get_info() because hwloc will scale efficiency values down to between 0 and the number of kinds minus 1.

Returns

`0` on success.

`-1` with `errno` set to `EINVAL` if some parameters are invalid, for instance if `cpuset` is `NULL` or empty.

23.35 Linux-specific helpers

Functions

- int hwloc_linux_set_tid_cpubind (hwloc_topology_t topology, pid_t tid, hwloc_const_cpuset_t set)
- int hwloc_linux_get_tid_cpubind (hwloc_topology_t topology, pid_t tid, hwloc_cpuset_t set)
- int hwloc_linux_get_tid_last_cpu_location (hwloc_topology_t topology, pid_t tid, hwloc_bitmap_t set)
- int hwloc_linux_read_path_as_cpumask (const char *path, hwloc_bitmap_t set)

23.35.1 Detailed Description

This includes helpers for manipulating Linux kernel cpumap files, and hwloc equivalents of the Linux sched_setaffinity and sched_getaffinity system calls.

23.35.2 Function Documentation

23.35.2.1 hwloc_linux_get_tid_cpubind()

```
int hwloc_linux_get_tid_cpubind (
            hwloc_topology_t topology,
            pid_t tid,
            hwloc_cpuset_t set )
```

Get the current binding of thread `tid`.
The CPU-set `set` (previously allocated by the caller) is filled with the list of PUs which the thread was last bound to.
The behavior is exactly the same as the Linux sched_getaffinity system call, but uses a hwloc cpuset.

Returns

0 on success, -1 on error.

Note

This is equivalent to calling hwloc_get_proc_cpubind() with HWLOC_CPUBIND_THREAD as flags.

23.35.2.2 hwloc_linux_get_tid_last_cpu_location()

```
int hwloc_linux_get_tid_last_cpu_location (
            hwloc_topology_t topology,
            pid_t tid,
            hwloc_bitmap_t set )
```

Get the last physical CPU where thread `tid` ran.
The CPU-set `set` (previously allocated by the caller) is filled with the PU which the thread last ran on.

Returns

0 on success, -1 on error.

Note

This is equivalent to calling hwloc_get_proc_last_cpu_location() with HWLOC_CPUBIND_THREAD as flags.

23.35.2.3 hwloc_linux_read_path_as_cpumask()

```
int hwloc_linux_read_path_as_cpumask (
            const char * path,
            hwloc_bitmap_t set )
```

Convert a linux kernel cpumask file `path` into a hwloc bitmap `set`.
Might be used when reading CPU set from sysfs attributes such as topology and caches for processors, or local↩ _cpus for devices.

Returns

0 on success, -1 on error.

Note

This function ignores the HWLOC_FSROOT environment variable.

23.35.2.4 hwloc_linux_set_tid_cpubind()

```
int hwloc_linux_set_tid_cpubind (
            hwloc_topology_t topology,
            pid_t tid,
            hwloc_const_cpuset_t set )
```

Bind a thread `tid` on cpus given in cpuset `set`.
The behavior is exactly the same as the Linux sched_setaffinity system call, but uses a hwloc cpuset.

Returns

0 on success, -1 on error.

Note

This is equivalent to calling hwloc_set_proc_cpubind() with HWLOC_CPUBIND_THREAD as flags.

23.36 Interoperability with Linux libnuma unsigned long masks

Functions

- static int hwloc_cpuset_to_linux_libnuma_ulongs (hwloc_topology_t topology, hwloc_const_cpuset_t cpuset, unsigned long *mask, unsigned long *maxnode)
- static int hwloc_nodeset_to_linux_libnuma_ulongs (hwloc_topology_t topology, hwloc_const_nodeset_t nodeset, unsigned long *mask, unsigned long *maxnode)
- static int hwloc_cpuset_from_linux_libnuma_ulongs (hwloc_topology_t topology, hwloc_cpuset_t cpuset, const unsigned long *mask, unsigned long maxnode)
- static int hwloc_nodeset_from_linux_libnuma_ulongs (hwloc_topology_t topology, hwloc_nodeset_t nodeset, const unsigned long *mask, unsigned long maxnode)

23.36.1 Detailed Description

This interface helps converting between Linux libnuma unsigned long masks and hwloc cpusets and nodesets.

Note

Topology `topology` must match the current machine.

The behavior of libnuma is undefined if the kernel is not NUMA-aware. (when CONFIG_NUMA is not set in the kernel configuration). This helper and libnuma may thus not be strictly compatible in this case, which may be detected by checking whether numa_available() returns -1.

23.36.2 Function Documentation

23.36.2.1 hwloc_cpuset_from_linux_libnuma_ulongs()

```
static int hwloc_cpuset_from_linux_libnuma_ulongs (
            hwloc_topology_t topology,
            hwloc_cpuset_t cpuset,
            const unsigned long * mask,
            unsigned long maxnode )  [inline], [static]
```

Convert the array of unsigned long `mask` into hwloc CPU set.
`mask` is a array of unsigned long that will be read. `maxnode` contains the maximal node number that may be read in `mask`.
This function may be used after calling get_mempolicy or any other function that takes an array of unsigned long as output parameter (and possibly a maximal node number as input parameter).

Returns

0 on success.

-1 on error, for instance if failing an internal reallocation.

23.36.2.2 hwloc_cpuset_to_linux_libnuma_ulongs()

```
static int hwloc_cpuset_to_linux_libnuma_ulongs (
            hwloc_topology_t topology,
            hwloc_const_cpuset_t cpuset,
            unsigned long * mask,
            unsigned long * maxnode )  [inline], [static]
```

Convert hwloc CPU set `cpuset` into the array of unsigned long `mask`.
`mask` is the array of unsigned long that will be filled. `maxnode` contains the maximal node number that may be stored in `mask`. `maxnode` will be set to the maximal node number that was found, plus one.
This function may be used before calling set_mempolicy, mbind, migrate_pages or any other function that takes an array of unsigned long and a maximal node number as input parameter.

Returns

0.

23.36.2.3 hwloc_nodeset_from_linux_libnuma_ulongs()

```
static int hwloc_nodeset_from_linux_libnuma_ulongs (
            hwloc_topology_t topology,
            hwloc_nodeset_t nodeset,
            const unsigned long * mask,
            unsigned long maxnode )  [inline], [static]
```

Convert the array of unsigned long `mask` into hwloc NUMA node set.
`mask` is a array of unsigned long that will be read. `maxnode` contains the maximal node number that may be read in `mask`.
This function may be used after calling get_mempolicy or any other function that takes an array of unsigned long as output parameter (and possibly a maximal node number as input parameter).

Returns

0 on success.

-1 with errno set to `ENOMEM` if some internal reallocation failed.

23.36.2.4 hwloc_nodeset_to_linux_libnuma_ulongs()

```
static int hwloc_nodeset_to_linux_libnuma_ulongs (
            hwloc_topology_t topology,
            hwloc_const_nodeset_t nodeset,
            unsigned long * mask,
            unsigned long * maxnode )  [inline], [static]
```

Convert hwloc NUMA node set `nodeset` into the array of unsigned long `mask`.
`mask` is the array of unsigned long that will be filled. `maxnode` contains the maximal node number that may be stored in `mask`. `maxnode` will be set to the maximal node number that was found, plus one.
This function may be used before calling set_mempolicy, mbind, migrate_pages or any other function that takes an array of unsigned long and a maximal node number as input parameter.

Returns

0.

23.37 Interoperability with Linux libnuma bitmask

Functions

- static struct bitmask * hwloc_cpuset_to_linux_libnuma_bitmask (hwloc_topology_t topology, hwloc_const_cpuset_t cpuset)
- static struct bitmask * hwloc_nodeset_to_linux_libnuma_bitmask (hwloc_topology_t topology, hwloc_const_nodeset_t nodeset)
- static int hwloc_cpuset_from_linux_libnuma_bitmask (hwloc_topology_t topology, hwloc_cpuset_t cpuset, const struct bitmask *bitmask)
- static int hwloc_nodeset_from_linux_libnuma_bitmask (hwloc_topology_t topology, hwloc_nodeset_t nodeset, const struct bitmask *bitmask)

23.37.1 Detailed Description

This interface helps converting between Linux libnuma bitmasks and hwloc cpusets and nodesets.

Note

Topology `topology` must match the current machine.

The behavior of libnuma is undefined if the kernel is not NUMA-aware. (when CONFIG_NUMA is not set in the kernel configuration). This helper and libnuma may thus not be strictly compatible in this case, which may be detected by checking whether numa_available() returns -1.

23.37.2 Function Documentation

23.37.2.1 hwloc_cpuset_from_linux_libnuma_bitmask()

```
static int hwloc_cpuset_from_linux_libnuma_bitmask (
            hwloc_topology_t topology,
            hwloc_cpuset_t cpuset,
            const struct bitmask * bitmask )  [inline], [static]
```

Convert libnuma bitmask `bitmask` into hwloc CPU set `cpuset`.
This function may be used after calling many numa_ functions that use a struct bitmask as an output parameter.

Returns

0 on success.

-1 with errno set to `ENOMEM` if some internal reallocation failed.

23.37.2.2 hwloc_cpuset_to_linux_libnuma_bitmask()

```
static struct bitmask * hwloc_cpuset_to_linux_libnuma_bitmask (
            hwloc_topology_t topology,
            hwloc_const_cpuset_t cpuset )  [inline], [static]
```

Convert hwloc CPU set `cpuset` into the returned libnuma bitmask.
The returned bitmask should later be freed with numa_bitmask_free.
This function may be used before calling many numa_ functions that use a struct bitmask as an input parameter.

Returns

newly allocated struct bitmask, or `NULL` on error.

23.37.2.3 hwloc_nodeset_from_linux_libnuma_bitmask()

```
static int hwloc_nodeset_from_linux_libnuma_bitmask (
            hwloc_topology_t topology,
            hwloc_nodeset_t nodeset,
            const struct bitmask * bitmask )  [inline], [static]
```

Convert libnuma bitmask `bitmask` into hwloc NUMA node set `nodeset`.
This function may be used after calling many numa_ functions that use a struct bitmask as an output parameter.

Returns

0 on success.

-1 with errno set to `ENOMEM` if some internal reallocation failed.

23.37.2.4 hwloc_nodeset_to_linux_libnuma_bitmask()

```
static struct bitmask * hwloc_nodeset_to_linux_libnuma_bitmask (
            hwloc_topology_t topology,
            hwloc_const_nodeset_t nodeset )  [inline], [static]
```

Convert hwloc NUMA node set `nodeset` into the returned libnuma bitmask.
The returned bitmask should later be freed with numa_bitmask_free.
This function may be used before calling many numa_ functions that use a struct bitmask as an input parameter.

Returns

newly allocated struct bitmask, or `NULL` on error.

23.38 Windows-specific helpers

Functions

- int hwloc_windows_get_nr_processor_groups (hwloc_topology_t topology, unsigned long flags)
- int hwloc_windows_get_processor_group_cpuset (hwloc_topology_t topology, unsigned pg_index, hwloc_cpuset_t cpuset, unsigned long flags)

23.38.1 Detailed Description

These functions query Windows processor groups. These groups partition the operating system into virtual sets of up to 64 neighbor PUs. Threads and processes may only be bound inside a single group. Although Windows processor groups may be exposed in the hwloc hierarchy as hwloc Groups, they are also often merged into existing hwloc objects such as NUMA nodes or Packages. This API provides explicit information about Windows processor groups so that applications know whether binding to a large set of PUs may fail because it spans over multiple Windows processor groups.

23.38.2 Function Documentation

23.38.2.1 hwloc_windows_get_nr_processor_groups()

```
int hwloc_windows_get_nr_processor_groups (
            hwloc_topology_t topology,
            unsigned long flags )
```

Get the number of Windows processor groups.
`flags` must be 0 for now.

Returns

at least `1` on success.

-1 on error, for instance if the topology does not match the current system (e.g. loaded from another machine through XML).

23.38.2.2 hwloc_windows_get_processor_group_cpuset()

```
int hwloc_windows_get_processor_group_cpuset (
            hwloc_topology_t topology,
            unsigned pg_index,
            hwloc_cpuset_t cpuset,
            unsigned long flags )
```

Get the CPU-set of a Windows processor group.
Get the set of PU included in the processor group specified by `pg_index`. `pg_index` must be between `0` and the value returned by hwloc_windows_get_nr_processor_groups() minus 1.
`flags` must be 0 for now.

Returns

`0` on success.

`-1` on error, for instance if `pg_index` is invalid, or if the topology does not match the current system (e.g. loaded from another machine through XML).

23.39 Interoperability with glibc sched affinity

Functions

- static int hwloc_cpuset_to_glibc_sched_affinity (hwloc_topology_t topology, hwloc_const_cpuset_t hwlocset, cpu_set_t *schedset, size_t schedsetsize)
- static int hwloc_cpuset_from_glibc_sched_affinity (hwloc_topology_t topology, hwloc_cpuset_t hwlocset, const cpu_set_t *schedset, size_t schedsetsize)

23.39.1 Detailed Description

This interface offers ways to convert between hwloc cpusets and glibc cpusets such as those manipulated by sched_getaffinity() or pthread_attr_setaffinity_np().

Note

Topology `topology` must match the current machine.

23.39.2 Function Documentation

23.39.2.1 hwloc_cpuset_from_glibc_sched_affinity()

```
static int hwloc_cpuset_from_glibc_sched_affinity (
            hwloc_topology_t topology,
            hwloc_cpuset_t hwlocset,
            const cpu_set_t * schedset,
            size_t schedsetsize )  [inline], [static]
```

Convert glibc sched affinity CPU set `schedset` into hwloc CPU set.
This function may be used before calling sched_setaffinity or any other function that takes a cpu_set_t as input parameter.
`schedsetsize` should be sizeof(cpu_set_t) unless `schedset` was dynamically allocated with CPU_ALLOC

Returns

0 on success.

-1 with errno set to `ENOMEM` if some internal reallocation failed.

23.39.2.2 hwloc_cpuset_to_glibc_sched_affinity()

```
static int hwloc_cpuset_to_glibc_sched_affinity (
            hwloc_topology_t topology,
            hwloc_const_cpuset_t hwlocset,
            cpu_set_t * schedset,
            size_t schedsetsize )  [inline], [static]
```

Convert hwloc CPU set `toposet` into glibc sched affinity CPU set `schedset`.
This function may be used before calling sched_setaffinity or any other function that takes a cpu_set_t as input parameter.
`schedsetsize` should be sizeof(cpu_set_t) unless `schedset` was dynamically allocated with CPU_ALLOC

Returns

0.

23.40 Interoperability with OpenCL

Functions

- static int hwloc_opencl_get_device_pci_busid (cl_device_id device, unsigned *domain, unsigned *bus, unsigned *dev, unsigned *func)
- static int hwloc_opencl_get_device_cpuset (hwloc_topology_t topology, cl_device_id device, hwloc_cpuset_t set)
- static hwloc_obj_t hwloc_opencl_get_device_osdev_by_index (hwloc_topology_t topology, unsigned platform_index, unsigned device_index)
- static hwloc_obj_t hwloc_opencl_get_device_osdev (hwloc_topology_t topology, cl_device_id device)

23.40.1 Detailed Description

This interface offers ways to retrieve topology information about OpenCL devices.
Only AMD and NVIDIA OpenCL implementations currently offer useful locality information about their devices.

23.40.2 Function Documentation

23.40.2.1 hwloc_opencl_get_device_cpuset()

```
static int hwloc_opencl_get_device_cpuset (
            hwloc_topology_t topology,
            cl_device_id device,
            hwloc_cpuset_t set )  [inline], [static]
```

Get the CPU set of processors that are physically close to OpenCL device `device`.
Store in `set` the CPU-set describing the locality of the OpenCL device `device`.
Topology `topology` and device `device` must match the local machine. I/O devices detection and the OpenCL component are not needed in the topology.
The function only returns the locality of the device. If more information about the device is needed, OS objects should be used instead, see hwloc_opencl_get_device_osdev() and hwloc_opencl_get_device_osdev_by_index().
This function is currently only implemented in a meaningful way for Linux with the AMD or NVIDIA OpenCL implementation; other systems will simply get a full cpuset.

Returns

0 on success.

-1 on error, for instance if the device could not be found.

23.40.2.2 hwloc_opencl_get_device_osdev()

```
static hwloc_obj_t hwloc_opencl_get_device_osdev (
            hwloc_topology_t topology,
            cl_device_id device )  [inline], [static]
```

Get the hwloc OS device object corresponding to OpenCL device `deviceX`.

Returns

The hwloc OS device object corresponding to the given OpenCL device `device`.

`NULL` if none could be found, for instance if required OpenCL attributes are not available.

This function currently only works on AMD and NVIDIA OpenCL devices that support relevant OpenCL extensions. hwloc_opencl_get_device_osdev_by_index() should be preferred whenever possible, i.e. when platform and device index are known.
Topology `topology` and device `device` must match the local machine. I/O devices detection and the OpenCL component must be enabled in the topology. If not, the locality of the object may still be found using hwloc_opencl_get_device_cpuset().

Note

This function cannot work if PCI devices are filtered out.

The corresponding hwloc PCI device may be found by looking at the result parent pointer (unless PCI devices are filtered out).

23.40.2.3 hwloc_opencl_get_device_osdev_by_index()

```
static hwloc_obj_t hwloc_opencl_get_device_osdev_by_index (
            hwloc_topology_t topology,
            unsigned platform_index,
            unsigned device_index )  [inline], [static]
```

Get the hwloc OS device object corresponding to the OpenCL device for the given indexes.

Returns

The hwloc OS device object describing the OpenCL device whose platform index is `platform_index`, and whose device index within this platform if `device_index`.

`NULL` if there is none.

The topology `topology` does not necessarily have to match the current machine. For instance the topology may be an XML import of a remote host. I/O devices detection and the OpenCL component must be enabled in the topology.

Note

The corresponding PCI device object can be obtained by looking at the OS device parent object (unless PCI devices are filtered out).

23.40.2.4 hwloc_opencl_get_device_pci_busid()

```
static int hwloc_opencl_get_device_pci_busid (
            cl_device_id device,
            unsigned * domain,
            unsigned * bus,
            unsigned * dev,
            unsigned * func )  [inline], [static]
```

Return the domain, bus and device IDs of the OpenCL device `device`.
Device `device` must match the local machine.

Returns

0 on success.

-1 on error, for instance if device information could not be found.

23.41 Interoperability with the CUDA Driver API

Functions

- static int hwloc_cuda_get_device_pci_ids (hwloc_topology_t topology, CUdevice cudevice, int *domain, int *bus, int *dev)
- static int hwloc_cuda_get_device_cpuset (hwloc_topology_t topology, CUdevice cudevice, hwloc_cpuset_t set)
- static hwloc_obj_t hwloc_cuda_get_device_pcidev (hwloc_topology_t topology, CUdevice cudevice)
- static hwloc_obj_t hwloc_cuda_get_device_osdev (hwloc_topology_t topology, CUdevice cudevice)
- static hwloc_obj_t hwloc_cuda_get_device_osdev_by_index (hwloc_topology_t topology, unsigned idx)

23.41.1 Detailed Description

This interface offers ways to retrieve topology information about CUDA devices when using the CUDA Driver API.

23.41.2 Function Documentation

23.41.2.1 hwloc_cuda_get_device_cpuset()

```
static int hwloc_cuda_get_device_cpuset (
            hwloc_topology_t topology,
            CUdevice cudevice,
            hwloc_cpuset_t set )  [inline], [static]
```

Get the CPU set of processors that are physically close to device `cudevice`.
Store in `set` the CPU-set describing the locality of the CUDA device `cudevice`.
Topology `topology` and device `cudevice` must match the local machine. I/O devices detection and the CUDA component are not needed in the topology.
The function only returns the locality of the device. If more information about the device is needed, OS objects should be used instead, see hwloc_cuda_get_device_osdev() and hwloc_cuda_get_device_osdev_by_index().
This function is currently only implemented in a meaningful way for Linux; other systems will simply get a full cpuset.

Returns

0 on success.

-1 on error, for instance if device information could not be found.

23.41.2.2 hwloc_cuda_get_device_osdev()

```
static hwloc_obj_t hwloc_cuda_get_device_osdev (
            hwloc_topology_t topology,
            CUdevice cudevice )  [inline], [static]
```

Get the hwloc OS device object corresponding to CUDA device `cudevice`.

Returns

The hwloc OS device object that describes the given CUDA device `cudevice`.

`NULL` if none could be found.

Topology `topology` and device `cudevice` must match the local machine. I/O devices detection and the CUDA component must be enabled in the topology. If not, the locality of the object may still be found using hwloc_cuda_get_device_cpuset().

Note

This function cannot work if PCI devices are filtered out.

The corresponding hwloc PCI device may be found by looking at the result parent pointer (unless PCI devices are filtered out).

23.41.2.3 hwloc_cuda_get_device_osdev_by_index()

```
static hwloc_obj_t hwloc_cuda_get_device_osdev_by_index (
            hwloc_topology_t topology,
            unsigned idx )  [inline], [static]
```

Get the hwloc OS device object corresponding to the CUDA device whose index is `idx`.

Returns

The hwloc OS device object describing the CUDA device whose index is `idx`.

`NULL` if none could be found.

The topology `topology` does not necessarily have to match the current machine. For instance the topology may be an XML import of a remote host. I/O devices detection and the CUDA component must be enabled in the topology.

Note

The corresponding PCI device object can be obtained by looking at the OS device parent object (unless PCI devices are filtered out).

This function is identical to hwloc_cudart_get_device_osdev_by_index().

23.41.2.4 hwloc_cuda_get_device_pci_ids()

```
static int hwloc_cuda_get_device_pci_ids (
            hwloc_topology_t topology,
            CUdevice cudevice,
            int * domain,
            int * bus,
            int * dev )  [inline], [static]
```

Return the domain, bus and device IDs of the CUDA device `cudevice`.
Device `cudevice` must match the local machine.

Returns

0 on success.

-1 on error, for instance if device information could not be found.

23.41.2.5 hwloc_cuda_get_device_pcidev()

```
static hwloc_obj_t hwloc_cuda_get_device_pcidev (
            hwloc_topology_t topology,
            CUdevice cudevice )  [inline], [static]
```

Get the hwloc PCI device object corresponding to the CUDA device `cudevice`.

Returns

The hwloc PCI device object describing the CUDA device `cudevice`.

`NULL` if none could be found.

Topology `topology` and device `cudevice` must match the local machine. I/O devices detection must be enabled in topology `topology`. The CUDA component is not needed in the topology.

23.42 Interoperability with the CUDA Runtime API

Functions

- static int hwloc_cudart_get_device_pci_ids (hwloc_topology_t topology, int idx, int *domain, int *bus, int *dev)
- static int hwloc_cudart_get_device_cpuset (hwloc_topology_t topology, int idx, hwloc_cpuset_t set)
- static hwloc_obj_t hwloc_cudart_get_device_pcidev (hwloc_topology_t topology, int idx)
- static hwloc_obj_t hwloc_cudart_get_device_osdev_by_index (hwloc_topology_t topology, unsigned idx)

23.42.1 Detailed Description

This interface offers ways to retrieve topology information about CUDA devices when using the CUDA Runtime API.

23.42.2 Function Documentation

23.42.2.1 hwloc_cudart_get_device_cpuset()

```
static int hwloc_cudart_get_device_cpuset (
            hwloc_topology_t topology,
            int idx,
            hwloc_cpuset_t set )  [inline], [static]
```

Get the CPU set of processors that are physically close to device `idx`.
Store in `set` the CPU-set describing the locality of the CUDA device whose index is `idx`.
Topology `topology` and device `idx` must match the local machine. I/O devices detection and the CUDA component are not needed in the topology.
The function only returns the locality of the device. If more information about the device is needed, OS objects should be used instead, see hwloc_cudart_get_device_osdev_by_index().
This function is currently only implemented in a meaningful way for Linux; other systems will simply get a full cpuset.

Returns

0 on success.

-1 on error, for instance if device information could not be found.

23.42.2.2 hwloc_cudart_get_device_osdev_by_index()

```
static hwloc_obj_t hwloc_cudart_get_device_osdev_by_index (
            hwloc_topology_t topology,
            unsigned idx )  [inline], [static]
```

Get the hwloc OS device object corresponding to the CUDA device whose index is `idx`.

Returns

The hwloc OS device object describing the CUDA device whose index is `idx`.

`NULL` if none could be found.

The topology `topology` does not necessarily have to match the current machine. For instance the topology may be an XML import of a remote host. I/O devices detection and the CUDA component must be enabled in the topology. If not, the locality of the object may still be found using hwloc_cudart_get_device_cpuset().

Note

The corresponding PCI device object can be obtained by looking at the OS device parent object (unless PCI devices are filtered out).

This function is identical to hwloc_cuda_get_device_osdev_by_index().

23.42.2.3 hwloc_cudart_get_device_pci_ids()

```
static int hwloc_cudart_get_device_pci_ids (
            hwloc_topology_t topology,
            int idx,
            int * domain,
            int * bus,
            int * dev )  [inline], [static]
```

Return the domain, bus and device IDs of the CUDA device whose index is `idx`.
Device index `idx` must match the local machine.

Returns

0 on success.

-1 on error, for instance if device information could not be found.

23.42.2.4 hwloc_cudart_get_device_pcidev()

```
static hwloc_obj_t hwloc_cudart_get_device_pcidev (
            hwloc_topology_t topology,
            int idx )  [inline], [static]
```

Get the hwloc PCI device object corresponding to the CUDA device whose index is `idx`.

Returns

The hwloc PCI device object describing the CUDA device whose index is `idx`.

`NULL` if none could be found.

Topology `topology` and device `idx` must match the local machine. I/O devices detection must be enabled in topology `topology`. The CUDA component is not needed in the topology.

23.43 Interoperability with the NVIDIA Management Library

Functions

- static int hwloc_nvml_get_device_cpuset (hwloc_topology_t topology, nvmlDevice_t device, hwloc_cpuset_t set)
- static hwloc_obj_t hwloc_nvml_get_device_osdev_by_index (hwloc_topology_t topology, unsigned idx)
- static hwloc_obj_t hwloc_nvml_get_device_osdev (hwloc_topology_t topology, nvmlDevice_t device)

23.43.1 Detailed Description

This interface offers ways to retrieve topology information about devices managed by the NVIDIA Management Library (NVML).

23.43.2 Function Documentation

23.43.2.1 hwloc_nvml_get_device_cpuset()

```
static int hwloc_nvml_get_device_cpuset (
            hwloc_topology_t topology,
            nvmlDevice_t device,
            hwloc_cpuset_t set )  [inline], [static]
```

Get the CPU set of processors that are physically close to NVML device `device`.
Store in `set` the CPU-set describing the locality of the NVML device `device`.
Topology `topology` and device `device` must match the local machine. I/O devices detection and the NVML component are not needed in the topology.
The function only returns the locality of the device. If more information about the device is needed, OS objects should be used instead, see hwloc_nvml_get_device_osdev() and hwloc_nvml_get_device_osdev_by_index().
This function is currently only implemented in a meaningful way for Linux; other systems will simply get a full cpuset.

Returns

0 on success.

-1 on error, for instance if device information could not be found.

23.43.2.2 hwloc_nvml_get_device_osdev()

```
static hwloc_obj_t hwloc_nvml_get_device_osdev (
            hwloc_topology_t topology,
            nvmlDevice_t device )  [inline], [static]
```

Get the hwloc OS device object corresponding to NVML device `device`.

Returns

The hwloc OS device object that describes the given NVML device `device`.

`NULL` if none could be found.

Topology `topology` and device `device` must match the local machine. I/O devices detection and the N↩VML component must be enabled in the topology. If not, the locality of the object may still be found using hwloc_nvml_get_device_cpuset().

Note

The corresponding hwloc PCI device may be found by looking at the result parent pointer (unless PCI devices are filtered out).

23.43.2.3 hwloc_nvml_get_device_osdev_by_index()

```
static hwloc_obj_t hwloc_nvml_get_device_osdev_by_index (
            hwloc_topology_t topology,
            unsigned idx )  [inline], [static]
```

Get the hwloc OS device object corresponding to the NVML device whose index is `idx`.

Returns

The hwloc OS device object describing the NVML device whose index is `idx`.

`NULL` if none could be found.

The topology `topology` does not necessarily have to match the current machine. For instance the topology may be an XML import of a remote host. I/O devices detection and the NVML component must be enabled in the topology.

Note

The corresponding PCI device object can be obtained by looking at the OS device parent object (unless PCI devices are filtered out).

23.44 Interoperability with the ROCm SMI Management Library

Functions

- static int hwloc_rsmi_get_device_cpuset (hwloc_topology_t topology, uint32_t dv_ind, hwloc_cpuset_t set)
- static hwloc_obj_t hwloc_rsmi_get_device_osdev_by_index (hwloc_topology_t topology, uint32_t dv_ind)
- static hwloc_obj_t hwloc_rsmi_get_device_osdev (hwloc_topology_t topology, uint32_t dv_ind)

23.44.1 Detailed Description

This interface offers ways to retrieve topology information about devices managed by the ROCm SMI Management Library.

23.44.2 Function Documentation

23.44.2.1 hwloc_rsmi_get_device_cpuset()

```
static int hwloc_rsmi_get_device_cpuset (
            hwloc_topology_t topology,
            uint32_t dv_ind,
            hwloc_cpuset_t set )  [inline], [static]
```

Get the CPU set of logical processors that are physically close to AMD GPU device whose index is `dv_ind`.
Store in `set` the CPU-set describing the locality of the AMD GPU device whose index is `dv_ind`.
Topology `topology` and device `dv_ind` must match the local machine. I/O devices detection and the ROCm SMI component are not needed in the topology.
The function only returns the locality of the device. If more information about the device is needed, OS objects should be used instead, see hwloc_rsmi_get_device_osdev() and hwloc_rsmi_get_device_osdev_by_index().
This function is currently only implemented in a meaningful way for Linux; other systems will simply get a full cpuset.

Returns

0 on success.

-1 on error, for instance if device information could not be found.

23.44.2.2 hwloc_rsmi_get_device_osdev()

```
static hwloc_obj_t hwloc_rsmi_get_device_osdev (
            hwloc_topology_t topology,
            uint32_t dv_ind )  [inline], [static]
```

Get the hwloc OS device object corresponding to AMD GPU device, whose index is `dv_ind`.

Returns

The hwloc OS device object that describes the given AMD GPU, whose index is `dv_ind`.

`NULL` if none could be found.

Topology `topology` and device `dv_ind` must match the local machine. I/O devices detection and the ROCm SMI component must be enabled in the topology. If not, the locality of the object may still be found using hwloc_rsmi_get_device_cpuset().

Note

The corresponding hwloc PCI device may be found by looking at the result parent pointer (unless PCI devices are filtered out).

23.44.2.3 hwloc_rsmi_get_device_osdev_by_index()

```
static hwloc_obj_t hwloc_rsmi_get_device_osdev_by_index (
            hwloc_topology_t topology,
            uint32_t dv_ind )  [inline], [static]
```

Get the hwloc OS device object corresponding to the AMD GPU device whose index is `dv_ind`.

Returns

The hwloc OS device object describing the AMD GPU device whose index is `dv_ind`.

`NULL` if none could be found.

The topology `topology` does not necessarily have to match the current machine. For instance the topology may be an XML import of a remote host. I/O devices detection and the ROCm SMI component must be enabled in the topology.

Note

The corresponding PCI device object can be obtained by looking at the OS device parent object (unless PCI devices are filtered out).

23.45 Interoperability with the oneAPI Level Zero interface.

Functions

- static int hwloc_levelzero_get_device_cpuset (hwloc_topology_t topology, ze_device_handle_t device, hwloc_cpuset_t set)
- static hwloc_obj_t hwloc_levelzero_get_device_osdev (hwloc_topology_t topology, ze_device_handle_t device)

23.45.1 Detailed Description

This interface offers ways to retrieve topology information about devices managed by the Level Zero API.

23.45.2 Function Documentation

23.45.2.1 hwloc_levelzero_get_device_cpuset()

```
static int hwloc_levelzero_get_device_cpuset (
            hwloc_topology_t topology,
            ze_device_handle_t device,
            hwloc_cpuset_t set )  [inline], [static]
```

Get the CPU set of logical processors that are physically close to the Level Zero device `device`.
Store in `set` the CPU-set describing the locality of the Level Zero device `device`.
Topology `topology` and device `device` must match the local machine. The Level Zero library must have been initialized with Sysman enabled (by calling zesInit(0) if supported, or by setting ZES_ENABLE_SYSMAN=1 in the environment). I/O devices detection and the Level Zero component are not needed in the topology.
The function only returns the locality of the device. If more information about the device is needed, OS objects should be used instead, see hwloc_levelzero_get_device_osdev().
This function is currently only implemented in a meaningful way for Linux; other systems will simply get a full cpuset.

Returns

0 on success.

-1 on error, for instance if device information could not be found.

23.45.2.2 hwloc_levelzero_get_device_osdev()

```
static hwloc_obj_t hwloc_levelzero_get_device_osdev (
            hwloc_topology_t topology,
            ze_device_handle_t device )  [inline], [static]
```

Get the hwloc OS device object corresponding to Level Zero device `device`.

Returns

The hwloc OS device object that describes the given Level Zero device `device`.

`NULL` if none could be found.

Topology `topology` and device `dv_ind` must match the local machine. I/O devices detection and the Level Zero component must be enabled in the topology. If not, the locality of the object may still be found using hwloc_levelzero_get_device_cpuset().

Note

The corresponding hwloc PCI device may be found by looking at the result parent pointer (unless PCI devices are filtered out).

23.46 Interoperability with OpenGL displays

Functions

- static hwloc_obj_t hwloc_gl_get_display_osdev_by_port_device (hwloc_topology_t topology, unsigned port, unsigned device)
- static hwloc_obj_t hwloc_gl_get_display_osdev_by_name (hwloc_topology_t topology, const char *name)
- static int hwloc_gl_get_display_by_osdev (hwloc_topology_t topology, hwloc_obj_t osdev, unsigned *port, unsigned *device)

23.46.1 Detailed Description

This interface offers ways to retrieve topology information about OpenGL displays.
Only the NVIDIA display locality information is currently available, using the NV-CONTROL X11 extension and the NVCtrl library.

23.46.2 Function Documentation

23.46.2.1 hwloc_gl_get_display_by_osdev()

```
static int hwloc_gl_get_display_by_osdev (
            hwloc_topology_t topology,
            hwloc_obj_t osdev,
            unsigned * port,
            unsigned * device )  [inline], [static]
```

Get the OpenGL display port and device corresponding to the given hwloc OS object.
Retrieves the OpenGL display port (server) in `port` and device (screen) in `screen` that correspond to the given hwloc OS device object.

Returns

0 on success.

-1 if none could be found.

The topology `topology` does not necessarily have to match the current machine. For instance the topology may be an XML import of a remote host. I/O devices detection and the GL component must be enabled in the topology.

23.46.2.2 hwloc_gl_get_display_osdev_by_name()

```
static hwloc_obj_t hwloc_gl_get_display_osdev_by_name (
            hwloc_topology_t topology,
            const char * name )  [inline], [static]
```

Get the hwloc OS device object corresponding to the OpenGL display given by name.

Returns

The hwloc OS device object describing the OpenGL display whose name is `name`, built as ":port.device" such as ":0.0" .

`NULL` if none could be found.

The topology `topology` does not necessarily have to match the current machine. For instance the topology may be an XML import of a remote host. I/O devices detection and the GL component must be enabled in the topology.

Note

The corresponding PCI device object can be obtained by looking at the OS device parent object (unless PCI devices are filtered out).

23.46.2.3 hwloc_gl_get_display_osdev_by_port_device()

```
static hwloc_obj_t hwloc_gl_get_display_osdev_by_port_device (
            hwloc_topology_t topology,
            unsigned port,
            unsigned device ) [inline], [static]
```

Get the hwloc OS device object corresponding to the OpenGL display given by port and device index.

Returns

The hwloc OS device object describing the OpenGL display whose port (server) is `port` and device (screen) is `device`.

`NULL` if none could be found.

The topology `topology` does not necessarily have to match the current machine. For instance the topology may be an XML import of a remote host. I/O devices detection and the GL component must be enabled in the topology.

Note

The corresponding PCI device object can be obtained by looking at the OS device parent object (unless PCI devices are filtered out).

23.47 Interoperability with OpenFabrics

Functions

- static int hwloc_ibv_get_device_cpuset (hwloc_topology_t topology, struct ibv_device *ibdev, hwloc_cpuset_t set)
- static hwloc_obj_t hwloc_ibv_get_device_osdev_by_name (hwloc_topology_t topology, const char *ibname)
- static hwloc_obj_t hwloc_ibv_get_device_osdev (hwloc_topology_t topology, struct ibv_device *ibdev)

23.47.1 Detailed Description

This interface offers ways to retrieve topology information about OpenFabrics devices (InfiniBand, Omni-Path, us↩ NIC, etc).

23.47.2 Function Documentation

23.47.2.1 hwloc_ibv_get_device_cpuset()

```
static int hwloc_ibv_get_device_cpuset (
            hwloc_topology_t topology,
            struct ibv_device * ibdev,
            hwloc_cpuset_t set )  [inline], [static]
```

Get the CPU set of processors that are physically close to device `ibdev`.
Store in `set` the CPU-set describing the locality of the OpenFabrics device `ibdev` (InfiniBand, etc).
Topology `topology` and device `ibdev` must match the local machine. I/O devices detection is not needed in the topology.
The function only returns the locality of the device. If more information about the device is needed, OS objects should be used instead, see hwloc_ibv_get_device_osdev() and hwloc_ibv_get_device_osdev_by_name().
This function is currently only implemented in a meaningful way for Linux; other systems will simply get a full cpuset.

Returns

0 on success.

-1 on error, for instance if device information could not be found.

23.47.2.2 hwloc_ibv_get_device_osdev()

```
static hwloc_obj_t hwloc_ibv_get_device_osdev (
            hwloc_topology_t topology,
            struct ibv_device * ibdev )  [inline], [static]
```

Get the hwloc OS device object corresponding to the OpenFabrics device `ibdev`.

Returns

The hwloc OS device object describing the OpenFabrics device `ibdev` (InfiniBand, etc).

`NULL` if none could be found.

Topology `topology` and device `ibdev` must match the local machine. I/O devices detection must be enabled in the topology. If not, the locality of the object may still be found using hwloc_ibv_get_device_cpuset().

Note

The corresponding PCI device object can be obtained by looking at the OS device parent object.

23.47.2.3 hwloc_ibv_get_device_osdev_by_name()

```
static hwloc_obj_t hwloc_ibv_get_device_osdev_by_name (
            hwloc_topology_t topology,
            const char * ibname )  [inline], [static]
```

Get the hwloc OS device object corresponding to the OpenFabrics device named `ibname`.

Returns

The hwloc OS device object describing the OpenFabrics device (InfiniBand, Omni-Path, usNIC, etc) whose name is `ibname` (mlx5_0, hfi1_0, usnic_0, qib0, etc).

`NULL` if none could be found.

The name `ibname` is usually obtained from ibv_get_device_name().
The topology `topology` does not necessarily have to match the current machine. For instance the topology may be an XML import of a remote host. I/O devices detection must be enabled in the topology.

Note

The corresponding PCI device object can be obtained by looking at the OS device parent object.

23.48 Topology differences

Data Structures

- union hwloc_topology_diff_obj_attr_u
- union hwloc_topology_diff_u

Typedefs

- typedef enum hwloc_topology_diff_obj_attr_type_e hwloc_topology_diff_obj_attr_type_t
- typedef enum hwloc_topology_diff_type_e hwloc_topology_diff_type_t
- typedef union hwloc_topology_diff_u * hwloc_topology_diff_t

Enumerations

- enum hwloc_topology_diff_obj_attr_type_e { HWLOC_TOPOLOGY_DIFF_OBJ_ATTR_SIZE, HWLOC_TOPOLOGY_DIFF_OB HWLOC_TOPOLOGY_DIFF_OBJ_ATTR_INFO }
- enum hwloc_topology_diff_type_e { HWLOC_TOPOLOGY_DIFF_OBJ_ATTR, HWLOC_TOPOLOGY_DIFF_TOO_COMPLEX }
- enum hwloc_topology_diff_apply_flags_e { HWLOC_TOPOLOGY_DIFF_APPLY_REVERSE }

Functions

- int hwloc_topology_diff_build (hwloc_topology_t topology, hwloc_topology_t newtopology, unsigned long flags, hwloc_topology_diff_t *diff)
- int hwloc_topology_diff_apply (hwloc_topology_t topology, hwloc_topology_diff_t diff, unsigned long flags)
- int hwloc_topology_diff_destroy (hwloc_topology_diff_t diff)
- int hwloc_topology_diff_load_xml (const char *xmlpath, hwloc_topology_diff_t *diff, char **refname)
- int hwloc_topology_diff_export_xml (hwloc_topology_diff_t diff, const char *refname, const char *xmlpath)
- int hwloc_topology_diff_load_xmlbuffer (const char *xmlbuffer, int buflen, hwloc_topology_diff_t *diff, char **refname)
- int hwloc_topology_diff_export_xmlbuffer (hwloc_topology_diff_t diff, const char *refname, char **xmlbuffer, int *buflen)

23.48.1 Detailed Description

Applications that manipulate many similar topologies, for instance one for each node of a homogeneous cluster, may want to compress topologies to reduce the memory footprint.
This file offers a way to manipulate the difference between topologies and export/import it to/from XML. Compression may therefore be achieved by storing one topology entirely while the others are only described by their differences with the former. The actual topology can be reconstructed when actually needed by applying the precomputed difference to the reference topology.
This interface targets very similar nodes. Only very simple differences between topologies are actually supported, for instance a change in the memory size, the name of the object, or some info attribute. More complex differences such as adding or removing objects cannot be represented in the difference structures and therefore return errors. Differences between object sets or topology-wide allowed sets, cannot be represented either.
It means that there is no need to apply the difference when looking at the tree organization (how many levels, how many objects per level, what kind of objects, CPU and node sets, etc) and when binding to objects. However the difference must be applied when looking at object attributes such as the name, the memory size or info attributes.

23.48.2 Typedef Documentation

23.48.2.1 hwloc_topology_diff_obj_attr_type_t

`typedef enum hwloc_topology_diff_obj_attr_type_e hwloc_topology_diff_obj_attr_type_t`
Type of one object attribute difference.

23.48.2.2 hwloc_topology_diff_t

`typedef union hwloc_topology_diff_u * hwloc_topology_diff_t`
One element of a difference list between two topologies.

23.48.2.3 hwloc_topology_diff_type_t

`typedef enum hwloc_topology_diff_type_e hwloc_topology_diff_type_t`
Type of one element of a difference list.

23.48.3 Enumeration Type Documentation

23.48.3.1 hwloc_topology_diff_apply_flags_e

`enum hwloc_topology_diff_apply_flags_e`
Flags to be given to hwloc_topology_diff_apply().

Enumerator

HWLOC_TOPOLOGY_DIFF_APPLY_REVERSE	Apply topology diff in reverse direction.

23.48.3.2 hwloc_topology_diff_obj_attr_type_e

`enum hwloc_topology_diff_obj_attr_type_e`
Type of one object attribute difference.

Enumerator

HWLOC_TOPOLOGY_DIFF_OBJ_ATTR_SIZE	The object local memory is modified. The union is a hwloc_topology_diff_obj_attr_u::hwloc_topology_diff_obj_attr_uint64_s (and the index field is ignored).
HWLOC_TOPOLOGY_DIFF_OBJ_ATTR_NAME	The object name is modified. The union is a hwloc_topology_diff_obj_attr_u::hwloc_topology_diff_obj_attr_string_s (and the name field is ignored).
HWLOC_TOPOLOGY_DIFF_OBJ_ATTR_INFO	the value of an info attribute is modified. The union is a hwloc_topology_diff_obj_attr_u::hwloc_topology_diff_obj_attr_string_s.

23.48.3.3 hwloc_topology_diff_type_e

`enum hwloc_topology_diff_type_e`
Type of one element of a difference list.

Enumerator

HWLOC_TOPOLOGY_DIFF_OBJ_ATTR	An object attribute was changed. The union is a hwloc_topology_diff_u::hwloc_topology_diff_obj_attr_s.
HWLOC_TOPOLOGY_DIFF_TOO_COMPLEX	The difference is too complex, it cannot be represented. The difference below this object has not been checked. hwloc_topology_diff_build() will return 1. The union is a hwloc_topology_diff_u::hwloc_topology_diff_too_complex_s.

23.48.4 Function Documentation

23.48.4.1 hwloc_topology_diff_apply()

```
int hwloc_topology_diff_apply (
            hwloc_topology_t topology,
            hwloc_topology_diff_t diff,
            unsigned long flags )
```

Apply a topology diff to an existing topology.
`flags` is an OR'ed set of hwloc_topology_diff_apply_flags_e.
The new topology is modified in place. hwloc_topology_dup() may be used to duplicate it before patching.
If the difference cannot be applied entirely, all previous applied elements are unapplied before returning.

Returns

0 on success.

-N if applying the difference failed while trying to apply the N-th part of the difference. For instance -1 is returned if the very first difference element could not be applied.

23.48.4.2 hwloc_topology_diff_build()

```
int hwloc_topology_diff_build (
            hwloc_topology_t topology,
            hwloc_topology_t newtopology,
            unsigned long flags,
            hwloc_topology_diff_t * diff )
```

Compute the difference between 2 topologies.
The difference is stored as a list of hwloc_topology_diff_t entries starting at `diff`. It is computed by doing a depth-first traversal of both topology trees simultaneously.
If the difference between 2 objects is too complex to be represented (for instance if some objects have different types, or different numbers of children), a special diff entry of type HWLOC_TOPOLOGY_DIFF_TOO_COMPLEX is queued. The computation of the diff does not continue below these objects. So each such diff entry means that the difference between two subtrees could not be computed.

Returns

0 if the difference can be represented properly.

0 with `diff` pointing to NULL if there is no difference between the topologies.

1 if the difference is too complex (see above). Some entries in the list will be of type HWLOC_TOPOLOGY_DIFF_TOO_COMPLE

-1 on any other error.

Note

`flags` is currently not used. It should be 0.

The output diff has to be freed with hwloc_topology_diff_destroy().

The output diff can only be exported to XML or passed to hwloc_topology_diff_apply() if 0 was returned, i.e. if no entry of type HWLOC_TOPOLOGY_DIFF_TOO_COMPLEX is listed.

The output diff may be modified by removing some entries from the list. The removed entries should be freed by passing them to to hwloc_topology_diff_destroy() (possible as another list).

23.48.4.3 hwloc_topology_diff_destroy()

```
int hwloc_topology_diff_destroy (
            hwloc_topology_diff_t diff )
```

Destroy a list of topology differences.

Returns

0.

23.48.4.4 hwloc_topology_diff_export_xml()

```
int hwloc_topology_diff_export_xml (
            hwloc_topology_diff_t diff,
            const char * refname,
            const char * xmlpath )
```

Export a list of topology differences to a XML file.
If not `NULL`, `refname` defines an identifier string for the reference topology which was used as a base when computing this difference. This identifier is usually the name of the other XML file that contains the reference topology. This attribute is given back when reading the diff from XML.

Returns

0 on success, -1 on error.

23.48.4.5 hwloc_topology_diff_export_xmlbuffer()

```
int hwloc_topology_diff_export_xmlbuffer (
            hwloc_topology_diff_t diff,
            const char * refname,
            char ** xmlbuffer,
            int * buflen )
```

Export a list of topology differences to a XML buffer.
If not `NULL`, `refname` defines an identifier string for the reference topology which was used as a base when computing this difference. This identifier is usually the name of the other XML file that contains the reference topology. This attribute is given back when reading the diff from XML.
The returned buffer ends with a \0 that is included in the returned length.

Returns

0 on success, -1 on error.

Note

The XML buffer should later be freed with hwloc_free_xmlbuffer().

23.48.4.6 hwloc_topology_diff_load_xml()

```
int hwloc_topology_diff_load_xml (
            const char * xmlpath,
            hwloc_topology_diff_t * diff,
            char ** refname )
```

Load a list of topology differences from a XML file.
If not `NULL`, `refname` will be filled with the identifier string of the reference topology for the difference file, if any was specified in the XML file. This identifier is usually the name of the other XML file that contains the reference topology.

Returns

0 on success, -1 on error.

Note

the pointer returned in refname should later be freed by the caller.

23.48.4.7 hwloc_topology_diff_load_xmlbuffer()

```
int hwloc_topology_diff_load_xmlbuffer (
            const char * xmlbuffer,
            int buflen,
            hwloc_topology_diff_t * diff,
            char ** refname )
```

Load a list of topology differences from a XML buffer.

Build a list of differences from the XML memory buffer given at `xmlbuffer` and of length `buflen` (including an ending \0). This buffer may have been filled earlier with hwloc_topology_diff_export_xmlbuffer().

If not `NULL`, `refname` will be filled with the identifier string of the reference topology for the difference file, if any was specified in the XML file. This identifier is usually the name of the other XML file that contains the reference topology.

Returns

0 on success, -1 on error.

Note

the pointer returned in refname should later be freed by the caller.

23.49 Sharing topologies between processes

Functions

- int hwloc_shmem_topology_get_length (hwloc_topology_t topology, size_t *lengthp, unsigned long flags)
- int hwloc_shmem_topology_write (hwloc_topology_t topology, int fd, hwloc_uint64_t fileoffset, void *mmap↩_address, size_t length, unsigned long flags)
- int hwloc_shmem_topology_adopt (hwloc_topology_t *topologyp, int fd, hwloc_uint64_t fileoffset, void *mmap_address, size_t length, unsigned long flags)

23.49.1 Detailed Description

These functions are used to share a topology between processes by duplicating it into a file-backed shared-memory buffer.
The master process must first get the required shared-memory size for storing this topology with hwloc_shmem_topology_get_length().
Then it must find a virtual memory area of that size that is available in all processes (identical virtual addresses in all processes). On Linux, this can be done by comparing holes found in /proc/<pid>/maps for each process.
Once found, it must open a destination file for storing the buffer, and pass it to hwloc_shmem_topology_write() together with virtual memory address and length obtained above.
Other processes may then adopt this shared topology by opening the same file and passing it to hwloc_shmem_topology_adopt() with the exact same virtual memory address and length.

23.49.2 Function Documentation

23.49.2.1 hwloc_shmem_topology_adopt()

```
int hwloc_shmem_topology_adopt (
            hwloc_topology_t * topologyp,
            int fd,
            hwloc_uint64_t fileoffset,
            void * mmap_address,
            size_t length,
            unsigned long flags )
```

Adopt a shared memory topology stored in a file.
Map a file in virtual memory and adopt the topology that was previously stored there with hwloc_shmem_topology_write().
The returned adopted topology in `topologyp` can be used just like any topology. And it must be destroyed with hwloc_topology_destroy() as usual.
However the topology is read-only. For instance, it cannot be modified with hwloc_topology_restrict() and object userdata pointers cannot be changed. The only exception is hwloc_topology_allow() which may be used to expose a different set of allowed CPUs and memory. This requires that the original topology (before sharing) was loaded with flag HWLOC_TOPOLOGY_FLAG_INCLUDE_DISALLOWED.
The segment of the file pointed by descriptor `fd`, starting at offset `fileoffset`, and of length `length` (in bytes), will be mapped at virtual address `mmap_address`.
The file pointed by descriptor `fd`, the offset `fileoffset`, the requested mapping virtual address `mmap_↩address` and the length `length` must be identical to what was given to hwloc_shmem_topology_write() earlier.

Note

Flags `flags` are currently unused, must be 0.

The object userdata pointer should not be used unless the process that created the shared topology also placed userdata-pointed buffers in shared memory.

This function takes care of calling hwloc_topology_abi_check().

Returns

0 on success.

-1 with errno set to `EBUSY` if the virtual memory mapping defined by `mmap_address` and `length` isn't available in the process.

-1 with errno set to `EINVAL` if `fileoffset`, `mmap_address` or `length` aren't page-aligned, or do not match what was given to hwloc_shmem_topology_write() earlier.

-1 with errno set to `EINVAL` if the layout of the topology structure is different between the writer process and the adopter process.

23.49.2.2 hwloc_shmem_topology_get_length()

```
int hwloc_shmem_topology_get_length (
            hwloc_topology_t topology,
            size_t * lengthp,
            unsigned long flags )
```

Get the required shared memory length for storing a topology.
This length (in bytes) must be used in hwloc_shmem_topology_write() and hwloc_shmem_topology_adopt() later.

Returns

the length, or -1 on error, for instance if flags are invalid.

Note

Flags `flags` are currently unused, must be 0.

23.49.2.3 hwloc_shmem_topology_write()

```
int hwloc_shmem_topology_write (
            hwloc_topology_t topology,
            int fd,
            hwloc_uint64_t fileoffset,
            void * mmap_address,
            size_t length,
            unsigned long flags )
```

Duplicate a topology to a shared memory file.
Temporarily map a file in virtual memory and duplicate the topology `topology` by allocating duplicates in there.
The segment of the file pointed by descriptor `fd`, starting at offset `fileoffset`, and of length `length` (in bytes), will be temporarily mapped at virtual address `mmap_address` during the duplication.
The mapping length `length` must have been previously obtained with hwloc_shmem_topology_get_length() and the topology must not have been modified in the meantime.

Note

Flags `flags` are currently unused, must be 0.

The object userdata pointer is duplicated but the pointed buffer is not. However the caller may also allocate it manually in shared memory to share it as well.

Returns

0 on success.

-1 with errno set to `EBUSY` if the virtual memory mapping defined by `mmap_address` and `length` isn't available in the process.

-1 with errno set to `EINVAL` if `fileoffset`, `mmap_address` or `length` aren't page-aligned.

23.50 Components and Plugins: Discovery components

Data Structures

- struct hwloc_disc_component

23.50.1 Detailed Description

Note

These structures and functions may change when HWLOC_COMPONENT_ABI is modified.

23.51 Components and Plugins: Discovery backends

Data Structures

- struct hwloc_disc_status
- struct hwloc_backend

Macros

- #define HWLOC_BACKEND_PRIVATE_DATA(_backend) (void∗)(((char∗)(_backend)) + sizeof(struct hwloc_backend))

Typedefs

- typedef enum hwloc_disc_phase_e hwloc_disc_phase_t

Enumerations

- enum hwloc_disc_phase_e { HWLOC_DISC_PHASE_GLOBAL, HWLOC_DISC_PHASE_CPU, HWLOC_DISC_PHASE_MEMORY, HWLOC_DISC_PHASE_PCI, HWLOC_DISC_PHASE_IO, HWLOC_DISC_PHASE_MISC, HWLOC_DISC_PHASE_ANNOTATE, HWLOC_DISC_PHASE_TWEAK }
- enum hwloc_disc_status_flag_e { HWLOC_DISC_STATUS_FLAG_GOT_ALLOWED_RESOURCES }

Functions

- struct hwloc_backend ∗ hwloc_backend_alloc (struct hwloc_topology ∗topology, struct hwloc_disc_component ∗component, unsigned long private_data_size)
- int hwloc_backend_enable (struct hwloc_backend ∗backend)

23.51.1 Detailed Description

Note

These structures and functions may change when HWLOC_COMPONENT_ABI is modified.

23.51.2 Macro Definition Documentation

23.51.2.1 HWLOC_BACKEND_PRIVATE_DATA

```
#define HWLOC_BACKEND_PRIVATE_DATA(
            _backend ) (void*)(((char*)(_backend)) + sizeof(struct hwloc_backend))
```

Return the private data pointer at the end of a backend structure.

23.51.3 Typedef Documentation

23.51.3.1 hwloc_disc_phase_t

```
typedef enum hwloc_disc_phase_e hwloc_disc_phase_t
```

Discovery phase.

23.51.4 Enumeration Type Documentation

23.51.4.1 hwloc_disc_phase_e

enum hwloc_disc_phase_e
Discovery phase.

Enumerator

HWLOC_DISC_PHASE_GLOBAL	xml or synthetic, platform-specific components. Discovers everything including CPU, memory, I/O and everything else. A component with a Global phase usually excludes all other phases.
HWLOC_DISC_PHASE_CPU	CPU discovery.
HWLOC_DISC_PHASE_MEMORY	Attach memory to existing CPU objects.
HWLOC_DISC_PHASE_PCI	Attach PCI devices and bridges to existing CPU objects.
HWLOC_DISC_PHASE_IO	I/O discovery that requires PCI devices (OS devices such as OpenCL, CUDA, etc.).
HWLOC_DISC_PHASE_MISC	Misc objects that gets added below anything else.
HWLOC_DISC_PHASE_ANNOTATE	Annotating existing objects, adding distances, etc.
HWLOC_DISC_PHASE_TWEAK	Final tweaks to a ready-to-use topology. This phase runs once the topology is loaded, before it is returned to the topology. Hence it may only use the main hwloc API for modifying the topology, for instance by restricting it, adding info attributes, etc.

23.51.4.2 hwloc_disc_status_flag_e

enum hwloc_disc_status_flag_e
Discovery status flags.

Enumerator

HWLOC_DISC_STATUS_FLAG_GOT_ALLOWED↩ _RESOURCES	The sets of allowed resources were already retrieved.

23.51.5 Function Documentation

23.51.5.1 hwloc_backend_alloc()

```
struct hwloc_backend* hwloc_backend_alloc (
            struct hwloc_topology * topology,
            struct hwloc_disc_component * component,
            unsigned long private_data_size )
```

Allocate a backend structure, set good default values, initialize backend->component and topology, etc. The caller will then modify whatever needed, and call hwloc_backend_enable(). If `private_data_size` is positive, additional space is allocated at the end of the structure for storing backend private data. That space may be obtained with HWLOC_BACKEND_PRIVATE_DATA() and may be freely modified by the backend.

23.51.5.2 hwloc_backend_enable()

```
int hwloc_backend_enable (
            struct hwloc_backend * backend )
```

Enable a previously allocated and setup backend.

23.52 Components and Plugins: Generic components

Data Structures

- struct hwloc_component

Typedefs

- typedef enum hwloc_component_type_e hwloc_component_type_t

Enumerations

- enum hwloc_component_type_e { HWLOC_COMPONENT_TYPE_DISC, HWLOC_COMPONENT_TYPE_XML }

23.52.1 Detailed Description

Note

These structures and functions may change when HWLOC_COMPONENT_ABI is modified.

23.52.2 Typedef Documentation

23.52.2.1 hwloc_component_type_t

`typedef enum hwloc_component_type_e hwloc_component_type_t`

Generic component type.

23.52.3 Enumeration Type Documentation

23.52.3.1 hwloc_component_type_e

`enum hwloc_component_type_e`

Generic component type.

Enumerator

HWLOC_COMPONENT_TYPE_DISC	The data field must point to a struct hwloc_disc_component.
HWLOC_COMPONENT_TYPE_XML	The data field must point to a struct hwloc_xml_component.

23.53 Components and Plugins: Core functions to be used by components

Macros

- #define HWLOC_SHOW_CRITICAL_ERRORS() (hwloc_hide_errors() < 2)
- #define HWLOC_SHOW_ALL_ERRORS() (hwloc_hide_errors() == 0)

Functions

- int hwloc_hide_errors (void)
- hwloc_obj_t hwloc__insert_object_by_cpuset (struct hwloc_topology *topology, hwloc_obj_t root, hwloc_obj_t obj, const char *reason)
- void hwloc_insert_object_by_parent (struct hwloc_topology *topology, hwloc_obj_t parent, hwloc_obj_t obj)
- hwloc_obj_t hwloc_alloc_setup_object (hwloc_topology_t topology, hwloc_obj_type_t type, unsigned os_↩index)
- int hwloc_obj_add_children_sets (hwloc_obj_t obj)
- int hwloc_topology_reconnect (hwloc_topology_t topology, unsigned long flags)
- static int hwloc_plugin_check_namespace (const char *pluginname, const char *symbol)

23.53.1 Detailed Description

Note

These structures and functions may change when HWLOC_COMPONENT_ABI is modified.

23.53.2 Macro Definition Documentation

23.53.2.1 HWLOC_SHOW_ALL_ERRORS

```
#define HWLOC_SHOW_ALL_ERRORS( ) (hwloc_hide_errors() == 0)
```

23.53.2.2 HWLOC_SHOW_CRITICAL_ERRORS

```
#define HWLOC_SHOW_CRITICAL_ERRORS( ) (hwloc_hide_errors() < 2)
```

23.53.3 Function Documentation

23.53.3.1 hwloc__insert_object_by_cpuset()

```
hwloc_obj_t hwloc__insert_object_by_cpuset (
            struct hwloc_topology * topology,
            hwloc_obj_t root,
            hwloc_obj_t obj,
            const char * reason )
```

Add an object to the topology.

Insert new object `obj` in the topology starting under existing object `root` (if `NULL`, the topology root object is used).

It is sorted along the tree of other objects according to the inclusion of cpusets, to eventually be added as a child of the smallest object including this object.

If the cpuset is empty, the type of the object (and maybe some attributes) must be enough to find where to insert the object. This is especially true for NUMA nodes with memory and no CPUs.

The given object should not have children.

This shall only be called before levels are built.

The caller should check whether the object type is filtered-out before calling this function.
The topology cpuset/nodesets will be enlarged to include the object sets.
`reason` is a unique string identifying where and why this insertion call was performed (it will be displayed in case of internal insertion error).
Returns the object on success. Returns NULL and frees obj on error. Returns another object and frees obj if it was merged with an identical pre-existing object.

23.53.3.2 hwloc_alloc_setup_object()

```
hwloc_obj_t hwloc_alloc_setup_object (
            hwloc_topology_t topology,
            hwloc_obj_type_t type,
            unsigned os_index )
```

Allocate and initialize an object of the given type and physical index.
If `os_index` is unknown or irrelevant, use `HWLOC_UNKNOWN_INDEX`.

23.53.3.3 hwloc_hide_errors()

```
int hwloc_hide_errors (
            void )
```

Check whether error messages are hidden.
Callers should print critical error messages (e.g. invalid hw topo info, invalid config) only if this function returns strictly less than 2.
Callers should print non-critical error messages (e.g. failure to initialize CUDA) if this function returns 0.
This function return 1 by default (show critical only), 0 in lstopo (show all), or anything set in HWLOC_HIDE_ER↩RORS in the environment.
Use macros HWLOC_SHOW_CRITICAL_ERRORS() and HWLOC_SHOW_ALL_ERRORS() for clarity.

23.53.3.4 hwloc_insert_object_by_parent()

```
void hwloc_insert_object_by_parent (
            struct hwloc_topology * topology,
            hwloc_obj_t parent,
            hwloc_obj_t obj )
```

Insert an object somewhere in the topology.
It is added as the last child of the given parent. The cpuset is completely ignored, so strange objects such as I/O devices should preferably be inserted with this.
When used for "normal" children with cpusets (when importing from XML when duplicating a topology), the caller should make sure that:

- children are inserted in order,
- children cpusets do not intersect.

The given object may have normal, I/O or Misc children, as long as they are in order as well. These children must have valid parent and next_sibling pointers.
The caller should check whether the object type is filtered-out before calling this function.

23.53.3.5 hwloc_obj_add_children_sets()

```
int hwloc_obj_add_children_sets (
            hwloc_obj_t obj )
```

Setup object cpusets/nodesets by OR'ing its children.
Used when adding an object late in the topology. Will update the new object by OR'ing all its new children sets.
Used when PCI backend adds a hostbridge parent, when distances add a new Group, etc.

23.53.3.6 hwloc_plugin_check_namespace()

```
static int hwloc_plugin_check_namespace (
            const char * pluginname,
            const char * symbol )  [inline], [static]
```

Make sure that plugins can lookup core symbols.
This is a sanity check to avoid lazy-lookup failures when libhwloc is loaded within a plugin, and later tries to load its own plugins. This may fail (and abort the program) if libhwloc symbols are in a private namespace.

Returns

0 on success.

-1 if the plugin cannot be successfully loaded. The caller plugin init() callback should return a negative error code as well.

Plugins should call this function in their init() callback to avoid later crashes if lazy symbol resolution is used by the upper layer that loaded hwloc (e.g. OpenCL implementations using dlopen with RTLD_LAZY).

Note

The build system must define HWLOC_INSIDE_PLUGIN if and only if building the caller as a plugin.

This function should remain inline so plugins can call it even when they cannot find libhwloc symbols.

23.53.3.7 hwloc_topology_reconnect()

```
int hwloc_topology_reconnect (
            hwloc_topology_t topology,
            unsigned long flags )
```

Request a reconnection of children and levels in the topology.
May be used by backends during discovery if they need arrays or lists of object within levels or children to be fully connected.
`flags` is currently unused, must 0.

23.54 Components and Plugins: Filtering objects

Functions

- static int hwloc_filter_check_pcidev_subtype_important (unsigned classid)
- static int hwloc_filter_check_osdev_subtype_important (hwloc_obj_osdev_type_t subtype)
- static int hwloc_filter_check_keep_object_type (hwloc_topology_t topology, hwloc_obj_type_t type)
- static int hwloc_filter_check_keep_object (hwloc_topology_t topology, hwloc_obj_t obj)

23.54.1 Detailed Description

Note

These structures and functions may change when HWLOC_COMPONENT_ABI is modified.

23.54.2 Function Documentation

23.54.2.1 hwloc_filter_check_keep_object()

```
static int hwloc_filter_check_keep_object (
            hwloc_topology_t topology,
            hwloc_obj_t obj )  [inline], [static]
```

Check whether the given object should be filtered-out.

Returns

1 if the object type should be kept, 0 otherwise.

23.54.2.2 hwloc_filter_check_keep_object_type()

```
static int hwloc_filter_check_keep_object_type (
            hwloc_topology_t topology,
            hwloc_obj_type_t type )  [inline], [static]
```

Check whether a non-I/O object type should be filtered-out.
Cannot be used for I/O objects.

Returns

1 if the object type should be kept, 0 otherwise.

23.54.2.3 hwloc_filter_check_osdev_subtype_important()

```
static int hwloc_filter_check_osdev_subtype_important (
            hwloc_obj_osdev_type_t subtype )  [inline], [static]
```

Check whether the given OS device subtype is important.

Returns

1 if important, 0 otherwise.

23.54.2.4 hwloc_filter_check_pcidev_subtype_important()

```
static int hwloc_filter_check_pcidev_subtype_important (
            unsigned classid )  [inline], [static]
```

Check whether the given PCI device classid is important.

Returns

1 if important, 0 otherwise.

23.55 Components and Plugins: helpers for PCI discovery

Functions

- unsigned hwloc_pcidisc_find_cap (const unsigned char *config, unsigned cap)
- int hwloc_pcidisc_find_linkspeed (const unsigned char *config, unsigned offset, float *linkspeed)
- hwloc_obj_type_t hwloc_pcidisc_check_bridge_type (unsigned device_class, const unsigned char *config)
- int hwloc_pcidisc_find_bridge_buses (unsigned domain, unsigned bus, unsigned dev, unsigned func, unsigned *secondary_busp, unsigned *subordinate_busp, const unsigned char *config)
- void hwloc_pcidisc_tree_insert_by_busid (struct hwloc_obj **treep, struct hwloc_obj *obj)
- int hwloc_pcidisc_tree_attach (struct hwloc_topology *topology, struct hwloc_obj *tree)

23.55.1 Detailed Description

Note

These structures and functions may change when HWLOC_COMPONENT_ABI is modified.

23.55.2 Function Documentation

23.55.2.1 hwloc_pcidisc_check_bridge_type()

```
hwloc_obj_type_t hwloc_pcidisc_check_bridge_type (
            unsigned device_class,
            const unsigned char * config )
```

Return the hwloc object type (PCI device or Bridge) for the given class and configuration space.
This function requires 16 bytes of common configuration header at the beginning of config.

23.55.2.2 hwloc_pcidisc_find_bridge_buses()

```
int hwloc_pcidisc_find_bridge_buses (
            unsigned domain,
            unsigned bus,
            unsigned dev,
            unsigned func,
            unsigned * secondary_busp,
            unsigned * subordinate_busp,
            const unsigned char * config )
```

Fills the attributes of the given PCI bridge using the given PCI config space.
This function requires 32 bytes of common configuration header at the beginning of config.
Returns -1 and destroys /p obj if bridge fields are invalid.

23.55.2.3 hwloc_pcidisc_find_cap()

```
unsigned hwloc_pcidisc_find_cap (
            const unsigned char * config,
            unsigned cap )
```

Return the offset of the given capability in the PCI config space buffer.
This function requires a 256-bytes config space. Unknown/unavailable bytes should be set to 0xff.

23.55.2.4 hwloc_pcidisc_find_linkspeed()

```
int hwloc_pcidisc_find_linkspeed (
            const unsigned char * config,
            unsigned offset,
            float * linkspeed )
```

Fill linkspeed by reading the PCI config space where PCI_CAP_ID_EXP is at position offset.
Needs 20 bytes of EXP capability block starting at offset in the config space for registers up to link status.

23.55.2.5 hwloc_pcidisc_tree_attach()

```
int hwloc_pcidisc_tree_attach (
            struct hwloc_topology * topology,
            struct hwloc_obj * tree )
```

Add some hostbridges on top of the given tree of PCI objects and attach them to the topology.
Other backends may lookup PCI objects or localities (for instance to attach OS devices) by using hwloc_pcidisc_↩ find_by_busid() or hwloc_pcidisc_find_busid_parent().

23.55.2.6 hwloc_pcidisc_tree_insert_by_busid()

```
void hwloc_pcidisc_tree_insert_by_busid (
            struct hwloc_obj ** treep,
            struct hwloc_obj * obj )
```

Insert a PCI object in the given PCI tree by looking at PCI bus IDs.
If `treep` points to `NULL`, the new object is inserted there.

23.56 Components and Plugins: finding PCI objects during other discoveries

Typedefs

- typedef void * hwloc_backend_distances_add_handle_t

Functions

- struct hwloc_obj * hwloc_pci_find_parent_by_busid (struct hwloc_topology *topology, unsigned domain, unsigned bus, unsigned dev, unsigned func)
- struct hwloc_obj * hwloc_pci_find_by_busid (struct hwloc_topology *topology, unsigned domain, unsigned bus, unsigned dev, unsigned func)
- hwloc_backend_distances_add_handle_t hwloc_backend_distances_add_create (hwloc_topology_t topology, const char *name, unsigned long kind, unsigned long flags)
- int hwloc_backend_distances_add_values (hwloc_topology_t topology, hwloc_backend_distances_add_handle_t handle, unsigned nbobjs, hwloc_obj_t *objs, hwloc_uint64_t *values, unsigned long flags)
- int hwloc_backend_distances_add_commit (hwloc_topology_t topology, hwloc_backend_distances_add_handle_t handle, unsigned long flags)

23.56.1 Detailed Description

Note

These structures and functions may change when HWLOC_COMPONENT_ABI is modified.

23.56.2 Typedef Documentation

23.56.2.1 hwloc_backend_distances_add_handle_t

```
typedef void* hwloc_backend_distances_add_handle_t
```

Handle to a new distances structure during its addition to the topology.

23.56.3 Function Documentation

23.56.3.1 hwloc_backend_distances_add_commit()

```
int hwloc_backend_distances_add_commit (
            hwloc_topology_t topology,
            hwloc_backend_distances_add_handle_t handle,
            unsigned long flags )
```

Commit a new distances structure.

This is similar to hwloc_distances_add_commit() but this variant is designed for backend inserting distances during topology discovery.

23.56.3.2 hwloc_backend_distances_add_create()

```
hwloc_backend_distances_add_handle_t hwloc_backend_distances_add_create (
            hwloc_topology_t topology,
            const char * name,
            unsigned long kind,
            unsigned long flags )
```

Create a new empty distances structure.

This is identical to hwloc_distances_add_create() but this variant is designed for backend inserting distances during topology discovery.

23.56.3.3 hwloc_backend_distances_add_values()

```
int hwloc_backend_distances_add_values (
            hwloc_topology_t topology,
            hwloc_backend_distances_add_handle_t handle,
            unsigned nbobjs,
            hwloc_obj_t * objs,
            hwloc_uint64_t * values,
            unsigned long flags )
```

Specify the objects and values in a new empty distances structure.
This is similar to hwloc_distances_add_values() but this variant is designed for backend inserting distances during topology discovery.
The only semantical difference is that `objs` and `values` are not duplicated, but directly attached to the topology. On success, these arrays are given to the core and should not ever be freed by the caller anymore.

23.56.3.4 hwloc_pci_find_by_busid()

```
struct hwloc_obj* hwloc_pci_find_by_busid (
            struct hwloc_topology * topology,
            unsigned domain,
            unsigned bus,
            unsigned dev,
            unsigned func )
```

Find the PCI device or bridge matching a PCI bus ID exactly.
This is useful for adding specific information about some objects based on their PCI id. When it comes to attaching objects based on PCI locality, hwloc_pci_find_parent_by_busid() should be preferred.

23.56.3.5 hwloc_pci_find_parent_by_busid()

```
struct hwloc_obj* hwloc_pci_find_parent_by_busid (
            struct hwloc_topology * topology,
            unsigned domain,
            unsigned bus,
            unsigned dev,
            unsigned func )
```

Find the object or a parent of a PCI bus ID.
When attaching a new object (typically an OS device) whose locality is specified by PCI bus ID, this function returns the PCI object to use as a parent for attaching.
If the exact PCI device with this bus ID exists, it is returned. Otherwise (for instance if it was filtered out), the function returns another object with similar locality (for instance a parent bridge, or the local CPU Package).

Chapter 24

Data Structure Documentation

24.1 hwloc_backend Struct Reference

```
#include <plugins.h>
```

Data Fields

- unsigned phases
- unsigned long flags
- int is_thissystem
- void(∗ disable)(struct hwloc_backend ∗backend)
- int(∗ discover)(struct hwloc_backend ∗backend, struct hwloc_disc_status ∗status)
- int(∗ get_pci_busid_cpuset)(struct hwloc_backend ∗backend, struct hwloc_pcidev_attr_s ∗busid, hwloc_bitmap_t cpuset)

24.1.1 Detailed Description

Discovery backend structure.
A backend is the instantiation of a discovery component. When a component gets enabled for a topology, its instantiate() callback creates a backend.
hwloc_backend_alloc() initializes all fields to default values that the component may change (except "component" and "next") before enabling the backend with hwloc_backend_enable().
Most backends assume that the topology is_thissystem flag is set because they talk to the underlying operating system. However they may still be used in topologies without the is_thissystem flag for debugging reasons. In practice, they are usually auto-disabled in such cases (excluded by xml or synthetic backends, or by environment variables when changing the Linux fsroot or the x86 cpuid path).

24.1.2 Field Documentation

24.1.2.1 disable

`void(* hwloc_backend::disable) (struct hwloc_backend *backend)`
Callback for freeing things stored inside the private data. May be NULL.

24.1.2.2 discover

`int(* hwloc_backend::discover) (struct hwloc_backend *backend, struct hwloc_disc_status *status)`
Main discovery callback. returns -1 on error, either because it couldn't add its objects ot the existing topology, or because of an actual discovery/gathering failure. May be NULL.

24.1.2.3 flags

`unsigned long hwloc_backend::flags`
Backend flags, currently always 0.

24.1.2.4 get_pci_busid_cpuset

`int(* hwloc_backend::get_pci_busid_cpuset) (struct hwloc_backend *backend, struct hwloc_↩ pcidev_attr_s *busid, hwloc_bitmap_t cpuset)`
Callback to retrieve the locality of a PCI object. Called by the PCI core when attaching PCI hierarchy to CPU objects. May be NULL.

24.1.2.5 is_thissystem

`int hwloc_backend::is_thissystem`
Backend-specific 'is_thissystem' property. Set to 0 if the backend disables the thissystem flag for this topology (e.g. loading from xml or synthetic string, or using a different fsroot on Linux, or a x86 CPUID dump). Set to -1 if the backend doesn't care (default).

24.1.2.6 phases

`unsigned hwloc_backend::phases`
Discovery phases performed by this component, possibly without some of them if excluded by other components. OR'ed set of hwloc_disc_phase_t.
The documentation for this struct was generated from the following file:

- plugins.h

24.2 hwloc_obj_attr_u::hwloc_bridge_attr_s Struct Reference

`#include <hwloc.h>`

Data Fields

- union {
  struct hwloc_pcidev_attr_s pci
  } upstream

- hwloc_obj_bridge_type_t upstream_type
- union {
  struct {
  unsigned int domain
  unsigned char secondary_bus
  unsigned char subordinate_bus
  } pci
  } downstream

- hwloc_obj_bridge_type_t downstream_type
- unsigned depth

24.2.1 Detailed Description

Bridge specific Object Attributes.

24.2.2 Field Documentation

24.2.2.1 depth

`unsigned hwloc_obj_attr_u::hwloc_bridge_attr_s::depth`

24.2.2.2 domain

`unsigned int hwloc_obj_attr_u::hwloc_bridge_attr_s::domain`
Domain number the downstream PCI buses.

24.2.2.3 downstream

`union { ... } hwloc_obj_attr_u::hwloc_bridge_attr_s::downstream`

24.2.2.4 downstream_type

`hwloc_obj_bridge_type_t hwloc_obj_attr_u::hwloc_bridge_attr_s::downstream_type`
Downstream Bridge type.

24.2.2.5 pci [1/2]

`struct { ... } hwloc_obj_attr_u::hwloc_bridge_attr_s::pci`

24.2.2.6 pci [2/2]

`struct hwloc_pcidev_attr_s hwloc_obj_attr_u::hwloc_bridge_attr_s::pci`
PCI attribute of the upstream part as a PCI device.

24.2.2.7 secondary_bus

`unsigned char hwloc_obj_attr_u::hwloc_bridge_attr_s::secondary_bus`
First PCI bus number below the bridge.

24.2.2.8 subordinate_bus

`unsigned char hwloc_obj_attr_u::hwloc_bridge_attr_s::subordinate_bus`
Highest PCI bus number below the bridge.

24.2.2.9 upstream

`union { ... } hwloc_obj_attr_u::hwloc_bridge_attr_s::upstream`

24.2.2.10 upstream_type

`hwloc_obj_bridge_type_t hwloc_obj_attr_u::hwloc_bridge_attr_s::upstream_type`
Upstream Bridge type.
The documentation for this struct was generated from the following file:

- hwloc.h

24.3 hwloc_obj_attr_u::hwloc_cache_attr_s Struct Reference

`#include <hwloc.h>`

Data Fields

- hwloc_uint64_t size
- unsigned depth
- unsigned linesize
- int associativity
- hwloc_obj_cache_type_t type

24.3.1 Detailed Description

Cache-specific Object Attributes.

24.3.2 Field Documentation

24.3.2.1 associativity

`int hwloc_obj_attr_u::hwloc_cache_attr_s::associativity`
Ways of associativity, -1 if fully associative, 0 if unknown.

24.3.2.2 depth

`unsigned hwloc_obj_attr_u::hwloc_cache_attr_s::depth`
Depth of cache (e.g., L1, L2, ...etc.)

24.3.2.3 linesize

`unsigned hwloc_obj_attr_u::hwloc_cache_attr_s::linesize`
Cache-line size in bytes. 0 if unknown.

24.3.2.4 size

`hwloc_uint64_t hwloc_obj_attr_u::hwloc_cache_attr_s::size`
Size of cache in bytes.

24.3.2.5 type

`hwloc_obj_cache_type_t hwloc_obj_attr_u::hwloc_cache_attr_s::type`
Cache type.
The documentation for this struct was generated from the following file:

- hwloc.h

24.4 hwloc_cl_device_pci_bus_info_khr Struct Reference

`#include <opencl.h>`

Data Fields

- cl_uint pci_domain
- cl_uint pci_bus
- cl_uint pci_device
- cl_uint pci_function

24.4.1 Field Documentation

24.4.1.1 pci_bus

```
cl_uint hwloc_cl_device_pci_bus_info_khr::pci_bus
```

24.4.1.2 pci_device

```
cl_uint hwloc_cl_device_pci_bus_info_khr::pci_device
```

24.4.1.3 pci_domain

```
cl_uint hwloc_cl_device_pci_bus_info_khr::pci_domain
```

24.4.1.4 pci_function

```
cl_uint hwloc_cl_device_pci_bus_info_khr::pci_function
```

The documentation for this struct was generated from the following file:

- opencl.h

24.5 hwloc_cl_device_topology_amd Union Reference

```
#include <opencl.h>
```

Data Fields

- struct {
  cl_uint type
  cl_uint data [5]
  } raw

- struct {
  cl_uint type
  cl_char unused [17]
  cl_char bus
  cl_char device
  cl_char function
  } pcie

24.5.1 Field Documentation

24.5.1.1 bus

```
cl_char hwloc_cl_device_topology_amd::bus
```

24.5.1.2 data

```
cl_uint hwloc_cl_device_topology_amd::data[5]
```

24.5.1.3 device

```
cl_char hwloc_cl_device_topology_amd::device
```

24.5.1.4 function

```
cl_char hwloc_cl_device_topology_amd::function
```

24.5.1.5 pcie

```
struct { ... } hwloc_cl_device_topology_amd::pcie
```

24.5.1.6 raw

```
struct { ... } hwloc_cl_device_topology_amd::raw
```

24.5.1.7 type

```
cl_uint hwloc_cl_device_topology_amd::type
```

24.5.1.8 unused

```
cl_char hwloc_cl_device_topology_amd::unused[17]
```

The documentation for this union was generated from the following file:

- opencl.h

24.6 hwloc_component Struct Reference

```
#include <plugins.h>
```

Data Fields

- unsigned abi
- int(∗ init)(unsigned long flags)
- void(∗ finalize)(unsigned long flags)
- hwloc_component_type_t type
- unsigned long flags
- void ∗ data

24.6.1 Detailed Description

Generic component structure.

Generic components structure, either statically listed by configure in static-components.h or dynamically loaded as a plugin.

24.6.2 Field Documentation

24.6.2.1 abi

`unsigned hwloc_component::abi`
Component ABI version, set to HWLOC_COMPONENT_ABI.

24.6.2.2 data

`void* hwloc_component::data`
Component data, pointing to a struct hwloc_disc_component or struct hwloc_xml_component.

24.6.2.3 finalize

`void(* hwloc_component::finalize) (unsigned long flags)`
Process-wide component termination callback.
This optional callback is called after unregistering the component from the hwloc core (before unloading the plugin).
`flags` is always 0 for now.

Note

If the component uses ltdl for loading its own plugins, it should load/unload them only in init() and finalize(), to avoid race conditions with hwloc's use of ltdl.

24.6.2.4 flags

`unsigned long hwloc_component::flags`
Component flags, unused for now.

24.6.2.5 init

`int(* hwloc_component::init) (unsigned long flags)`
Process-wide component initialization callback.
This optional callback is called when the component is registered to the hwloc core (after loading the plugin).
When the component is built as a plugin, this callback should call hwloc_check_plugin_namespace() and return an negative error code on error.
`flags` is always 0 for now.

Returns

0 on success, or a negative code on error.

Note

If the component uses ltdl for loading its own plugins, it should load/unload them only in init() and finalize(), to avoid race conditions with hwloc's use of ltdl.

24.6.2.6 type

`hwloc_component_type_t hwloc_component::type`
Component type.
The documentation for this struct was generated from the following file:

- plugins.h

24.7 hwloc_disc_component Struct Reference

`#include <plugins.h>`

Data Fields

- const char * name
- unsigned phases
- unsigned excluded_phases
- struct hwloc_backend *(* instantiate)(struct hwloc_topology *topology, struct hwloc_disc_component *component, unsigned excluded_phases, const void *data1, const void *data2, const void *data3)
- unsigned priority
- unsigned enabled_by_default

24.7.1 Detailed Description

Discovery component structure.
This is the major kind of components, taking care of the discovery. They are registered by generic components, either statically-built or as plugins.

24.7.2 Field Documentation

24.7.2.1 enabled_by_default

`unsigned hwloc_disc_component::enabled_by_default`
Enabled by default. If unset, if will be disabled unless explicitly requested.

24.7.2.2 excluded_phases

`unsigned hwloc_disc_component::excluded_phases`
Component phases to exclude, as an OR'ed set of hwloc_disc_phase_t.
For a GLOBAL component, this usually includes all other phases (~UL).
Other components only exclude types that may bring conflicting topology information. MISC components should likely not be excluded since they usually bring non-primary additional information.

24.7.2.3 instantiate

`struct hwloc_backend*(* hwloc_disc_component::instantiate) (struct hwloc_topology *topology, struct hwloc_disc_component *component, unsigned excluded_phases, const void *data1, const void *data2, const void *data3)`
Instantiate callback to create a backend from the component. Parameters data1, data2, data3 are NULL except for components that have special enabling routines such as hwloc_topology_set_xml().

24.7.2.4 name

`const char* hwloc_disc_component::name`
Name. If this component is built as a plugin, this name does not have to match the plugin filename.

24.7.2.5 phases

`unsigned hwloc_disc_component::phases`
Discovery phases performed by this component. OR'ed set of hwloc_disc_phase_t.

24.7.2.6 priority

`unsigned hwloc_disc_component::priority`
Component priority. Used to sort topology->components, higher priority first. Also used to decide between two components with the same name.
Usual values are 50 for native OS (or platform) components, 45 for x86, 40 for no-OS fallback, 30 for global components (xml, synthetic), 20 for pci, 10 for other misc components (opencl etc.).
The documentation for this struct was generated from the following file:

- plugins.h

24.8 hwloc_disc_status Struct Reference

`#include <plugins.h>`

Data Fields

- hwloc_disc_phase_t phase
- unsigned excluded_phases
- unsigned long flags

24.8.1 Detailed Description

Discovery status structure.
Used by the core and backends to inform about what has been/is being done during the discovery process.

24.8.2 Field Documentation

24.8.2.1 excluded_phases

`unsigned hwloc_disc_status::excluded_phases`
Dynamically excluded phases. If a component decides during discovery that some phases are no longer needed.

24.8.2.2 flags

`unsigned long hwloc_disc_status::flags`
OR'ed set of hwloc_disc_status_flag_e.

24.8.2.3 phase

`hwloc_disc_phase_t hwloc_disc_status::phase`
The current discovery phase that is performed. Must match one of the phases in the component phases field.
The documentation for this struct was generated from the following file:

- plugins.h

24.9 hwloc_distances_s Struct Reference

`#include <distances.h>`

Data Fields

- unsigned nbobjs
- hwloc_obj_t * objs
- unsigned long kind
- hwloc_uint64_t * values

24.9.1 Detailed Description

Matrix of distances between a set of objects.
The most common matrix contains latencies between NUMA nodes (as reported in the System Locality Distance Information Table (SLIT) in the ACPI specification), which may or may not be physically accurate. It corresponds to the latency for accessing the memory of one node from a core in another node. The corresponding kind is ::HWLOC_DISTANCES_KIND_MEANS_LATENCY | HWLOC_DISTANCES_KIND_FROM_USER. The name of this distances structure is "NUMALatency".
The matrix may also contain bandwidths or number of hops between random sets of objects, possibly provided by the user, as specified in the `kind` attribute. Others common distance structures include and "XGMIBandwidth", "XGMIHops", "XeLinkBandwidth" and "NVLinkBandwidth".
Pointers `objs` and `values` should not be replaced, reallocated, freed, etc. However callers are allowed to modify `kind` as well as the contents of `objs` and `values` arrays. For instance, if there is a single NUMA node per Package, hwloc_get_obj_with_same_locality() may be used to convert between them and replace NUMA nodes in the `objs` array with the corresponding Packages. See also hwloc_distances_transform() for applying some transformations to the structure.

24.9.2 Field Documentation

24.9.2.1 kind

`unsigned long hwloc_distances_s::kind`
OR'ed set of hwloc_distances_kind_e.

24.9.2.2 nbobjs

`unsigned hwloc_distances_s::nbobjs`
Number of objects described by the distance matrix.

24.9.2.3 objs

`hwloc_obj_t* hwloc_distances_s::objs`
Array of objects described by the distance matrix. These objects are not in any particular order, see hwloc_distances_obj_index() and hwloc_distances_obj_pair_values() for easy ways to find objects in this array and their corresponding values.

24.9.2.4 values

`hwloc_uint64_t* hwloc_distances_s::values`
Matrix of distances between objects, stored as a one-dimension array.
Distance from i-th to j-th object is stored in slot i*nbobjs+j. The meaning of the value depends on the `kind` attribute.
The documentation for this struct was generated from the following file:

- distances.h

24.10 hwloc_obj_attr_u::hwloc_group_attr_s Struct Reference

`#include <hwloc.h>`

Data Fields

- unsigned depth
- unsigned kind
- unsigned subkind
- unsigned char dont_merge

24.10.1 Detailed Description

Group-specific Object Attributes.

24.10.2 Field Documentation

24.10.2.1 depth

`unsigned hwloc_obj_attr_u::hwloc_group_attr_s::depth`
Depth of group object. It may change if intermediate Group objects are added.

24.10.2.2 dont_merge

`unsigned char hwloc_obj_attr_u::hwloc_group_attr_s::dont_merge`
Flag preventing groups from being automatically merged with identical parent or children.

24.10.2.3 kind

`unsigned hwloc_obj_attr_u::hwloc_group_attr_s::kind`
Internally-used kind of group.

24.10.2.4 subkind

`unsigned hwloc_obj_attr_u::hwloc_group_attr_s::subkind`
Internally-used subkind to distinguish different levels of groups with same kind.
The documentation for this struct was generated from the following file:

- hwloc.h

24.11 hwloc_info_s Struct Reference

```
#include <hwloc.h>
```

Data Fields

- char * name
- char * value

24.11.1 Detailed Description

Info attribute (name and value strings)

See also

Consulting and Adding Info Attributes

24.11.2 Field Documentation

24.11.2.1 name

`char* hwloc_info_s::name`
Info name.

24.11.2.2 value

`char* hwloc_info_s::value`
Info value.
The documentation for this struct was generated from the following file:

- hwloc.h

24.12 hwloc_infos_s Struct Reference

`#include <hwloc.h>`

Data Fields

- struct hwloc_info_s * array
- unsigned count

24.12.1 Detailed Description

Array of string info attributes (pairs of name and value).
These structures may only be modified with hwloc_obj_add_info() and hwloc_modify_infos().

See also

Consulting and Adding Info Attributes

24.12.2 Field Documentation

24.12.2.1 array

`struct hwloc_info_s* hwloc_infos_s::array`
Array of string pairs.

24.12.2.2 count

`unsigned hwloc_infos_s::count`
Number of elements in the array.
The documentation for this struct was generated from the following file:

- hwloc.h

24.13 hwloc_location Struct Reference

`#include <memattrs.h>`

Data Structures

- union hwloc_location_u

Data Fields

- enum hwloc_location_type_e type
- union hwloc_location::hwloc_location_u location

24.13.1 Detailed Description

Where to measure attributes from.

24.13.2 Field Documentation

24.13.2.1 location

`union hwloc_location::hwloc_location_u hwloc_location::location`

24.13.2.2 type

`enum hwloc_location_type_e hwloc_location::type`
Type of location.
The documentation for this struct was generated from the following file:

- memattrs.h

24.14 hwloc_location::hwloc_location_u Union Reference

`#include <memattrs.h>`

Data Fields

- hwloc_cpuset_t cpuset
- hwloc_obj_t object

24.14.1 Detailed Description

Actual location.

24.14.2 Field Documentation

24.14.2.1 cpuset

`hwloc_cpuset_t hwloc_location::hwloc_location_u::cpuset`
Location as a cpuset, when the location type is HWLOC_LOCATION_TYPE_CPUSET.

24.14.2.2 object

`hwloc_obj_t hwloc_location::hwloc_location_u::object`
Location as an object, when the location type is HWLOC_LOCATION_TYPE_OBJECT.
The documentation for this union was generated from the following file:

- memattrs.h

24.15 hwloc_obj_attr_u::hwloc_numanode_attr_s::hwloc_memory_page_type_s Struct Reference

`#include <hwloc.h>`

Data Fields

- hwloc_uint64_t size
- hwloc_uint64_t count

24.15.1 Detailed Description

Array of local memory page types, `NULL` if no local memory and `page_types` is 0.
The array is sorted by increasing `size` fields. It contains `page_types_len` slots.

24.15.2 Field Documentation

24.15.2.1 count

`hwloc_uint64_t hwloc_obj_attr_u::hwloc_numanode_attr_s::hwloc_memory_page_type_s::count`
Number of pages of this size.

24.15.2.2 size

`hwloc_uint64_t hwloc_obj_attr_u::hwloc_numanode_attr_s::hwloc_memory_page_type_s::size`
Size of pages.
The documentation for this struct was generated from the following file:

- hwloc.h

24.16 hwloc_obj_attr_u::hwloc_numanode_attr_s Struct Reference

`#include <hwloc.h>`

Data Structures

- struct hwloc_memory_page_type_s

Data Fields

- hwloc_uint64_t local_memory
- unsigned page_types_len
- struct hwloc_obj_attr_u::hwloc_numanode_attr_s::hwloc_memory_page_type_s * page_types

24.16.1 Detailed Description

NUMA node-specific Object Attributes.

24.16.2 Field Documentation

24.16.2.1 local_memory

`hwloc_uint64_t hwloc_obj_attr_u::hwloc_numanode_attr_s::local_memory`
Local memory (in bytes)

24.16.2.2 page_types

`struct hwloc_obj_attr_u::hwloc_numanode_attr_s::hwloc_memory_page_type_s * hwloc_obj_attr_u↩ ::hwloc_numanode_attr_s::page_types`

24.16.2.3 page_types_len

`unsigned hwloc_obj_attr_u::hwloc_numanode_attr_s::page_types_len`
Size of array `page_types`.
The documentation for this struct was generated from the following file:

- hwloc.h

24.17 hwloc_obj Struct Reference

`#include <hwloc.h>`

Data Fields

- hwloc_obj_type_t type
- char * subtype
- unsigned os_index
- char * name
- hwloc_uint64_t total_memory
- union hwloc_obj_attr_u * attr
- int depth
- unsigned logical_index
- struct hwloc_obj * next_cousin
- struct hwloc_obj * prev_cousin
- struct hwloc_obj * parent
- unsigned sibling_rank
- struct hwloc_obj * next_sibling
- struct hwloc_obj * prev_sibling
- int symmetric_subtree
- hwloc_cpuset_t cpuset
- hwloc_cpuset_t complete_cpuset
- hwloc_nodeset_t nodeset
- hwloc_nodeset_t complete_nodeset
- struct hwloc_infos_s infos
- void * userdata
- hwloc_uint64_t gp_index

List and array of normal children below this object (except Memory, I/O and Misc children).

- unsigned arity
- struct hwloc_obj ** children
- struct hwloc_obj * first_child
- struct hwloc_obj * last_child

List of Memory children below this object.

- unsigned memory_arity
- struct hwloc_obj * memory_first_child

List of I/O children below this object.

- unsigned io_arity
- struct hwloc_obj * io_first_child

List of Misc children below this object.

- unsigned misc_arity
- struct hwloc_obj * misc_first_child

24.17.1 Detailed Description

Structure of a topology object.
Applications must not modify any field except `hwloc_obj.userdata`.

24.17.2 Field Documentation

24.17.2.1 arity

`unsigned hwloc_obj::arity`
Number of normal children. Memory, Misc and I/O children are not listed here but rather in their dedicated children list.

24.17.2.2 attr

`union hwloc_obj_attr_u* hwloc_obj::attr`
Object type-specific Attributes, may be `NULL` if no attribute value was found.

24.17.2.3 children

`struct hwloc_obj** hwloc_obj::children`
Normal children, `children`[0 .. arity -1].

24.17.2.4 complete_cpuset

`hwloc_cpuset_t hwloc_obj::complete_cpuset`
The complete CPU set of processors of this object,.
This may include not only the same as the cpuset field, but also some CPUs for which topology information is unknown or incomplete, some offlines CPUs, and the CPUs that are ignored when the HWLOC_TOPOLOGY_FLAG_INCLUDE_DISALLOWED flag is not set. Thus no corresponding PU object may be found in the topology, because the precise position is undefined. It is however known that it would be somewhere under this object.

Note

Its value must not be changed, hwloc_bitmap_dup() must be used instead.

24.17.2.5 complete_nodeset

`hwloc_nodeset_t hwloc_obj::complete_nodeset`

The complete NUMA node set of this object,.

This may include not only the same as the nodeset field, but also some NUMA nodes for which topology information is unknown or incomplete, some offlines nodes, and the nodes that are ignored when the HWLOC_TOPOLOGY_FLAG_INCLUDE_DISALLOWED flag is not set. Thus no corresponding NUMA node object may be found in the topology, because the precise position is undefined. It is however known that it would be somewhere under this object.

If there are no NUMA nodes in the machine, all the memory is close to this object, so only the first bit is set in `complete_nodeset`.

Note

Its value must not be changed, hwloc_bitmap_dup() must be used instead.

24.17.2.6 cpuset

`hwloc_cpuset_t hwloc_obj::cpuset`

CPUs covered by this object.

This is the set of CPUs for which there are PU objects in the topology under this object, i.e. which are known to be physically contained in this object and known how (the children path between this object and the PU objects).

If the HWLOC_TOPOLOGY_FLAG_INCLUDE_DISALLOWED configuration flag is set, some of these CPUs may be online but not allowed for binding, see hwloc_topology_get_allowed_cpuset().

Note

All objects have non-NULL CPU and node sets except Misc and I/O objects.

Its value must not be changed, hwloc_bitmap_dup() must be used instead.

24.17.2.7 depth

`int hwloc_obj::depth`

Vertical index in the hierarchy.

For normal objects, this is the depth of the horizontal level that contains this object and its cousins of the same type. If the topology is symmetric, this is equal to the parent depth plus one, and also equal to the number of parent/child links from the root object to here.

For special objects (NUMA nodes, I/O and Misc) that are not in the main tree, this is a special negative value that corresponds to their dedicated level, see hwloc_get_type_depth() and hwloc_get_type_depth_e. Those special values can be passed to hwloc functions such hwloc_get_nbobjs_by_depth() as usual.

24.17.2.8 first_child

`struct hwloc_obj* hwloc_obj::first_child`

First normal child.

24.17.2.9 gp_index

`hwloc_uint64_t hwloc_obj::gp_index`

Global persistent index. Generated by hwloc, unique across the topology (contrary to os_index) and persistent across topology changes (contrary to logical_index). Mostly used internally, but could also be used by application to identify objects.

24.17.2.10 infos

`struct hwloc_infos_s hwloc_obj::infos`
Array of info attributes (name and value strings).

24.17.2.11 io_arity

`unsigned hwloc_obj::io_arity`
Number of I/O children. These children are listed in `io_first_child`.

24.17.2.12 io_first_child

`struct hwloc_obj* hwloc_obj::io_first_child`
First I/O child. Bridges, PCI and OS devices are listed here (`io_arity` and `io_first_child`) instead of in the normal children list. See also hwloc_obj_type_is_io().

24.17.2.13 last_child

`struct hwloc_obj* hwloc_obj::last_child`
Last normal child.

24.17.2.14 logical_index

`unsigned hwloc_obj::logical_index`
Horizontal index in the whole list of similar objects, hence guaranteed unique across the entire machine. Could be a "cousin_rank" since it's the rank within the "cousin" list below Note that this index may change when restricting the topology or when inserting a group.

24.17.2.15 memory_arity

`unsigned hwloc_obj::memory_arity`
Number of Memory children. These children are listed in `memory_first_child`.

24.17.2.16 memory_first_child

`struct hwloc_obj* hwloc_obj::memory_first_child`
First Memory child. NUMA nodes and Memory-side caches are listed here (`memory_arity` and `memory_first_child`) instead of in the normal children list. See also hwloc_obj_type_is_memory().
A memory hierarchy starts from a normal CPU-side object (e.g. Package) and ends with NUMA nodes as leaves. There might exist some memory-side caches between them in the middle of the memory subtree.

24.17.2.17 misc_arity

`unsigned hwloc_obj::misc_arity`
Number of Misc children. These children are listed in `misc_first_child`.

24.17.2.18 misc_first_child

`struct hwloc_obj* hwloc_obj::misc_first_child`
First Misc child. Misc objects are listed here (`misc_arity` and `misc_first_child`) instead of in the normal children list.

24.17.2.19 name

`char* hwloc_obj::name`
Object-specific name if any. Mostly used for identifying OS devices and Misc objects where a name string is more useful than numerical indexes.

24.17.2.20 next_cousin

`struct hwloc_obj* hwloc_obj::next_cousin`
Next object of same type and depth.

24.17.2.21 next_sibling

`struct hwloc_obj* hwloc_obj::next_sibling`
Next object below the same parent (inside the same list of children).

24.17.2.22 nodeset

`hwloc_nodeset_t hwloc_obj::nodeset`
NUMA nodes covered by this object or containing this object.
This is the set of NUMA nodes for which there are NUMA node objects in the topology under or above this object, i.e. which are known to be physically contained in this object or containing it and known how (the children path between this object and the NUMA node objects).
In the end, these nodes are those that are close to the current object. Function hwloc_get_local_numanode_objs() may be used to list those NUMA nodes more precisely.
If the HWLOC_TOPOLOGY_FLAG_INCLUDE_DISALLOWED configuration flag is set, some of these nodes may be online but not allowed for allocation, see hwloc_topology_get_allowed_nodeset().
If there are no NUMA nodes in the machine, all the memory is close to this object, so only the first bit may be set in `nodeset`.

Note

All objects have non-NULL CPU and node sets except Misc and I/O objects.

Its value must not be changed, hwloc_bitmap_dup() must be used instead.

24.17.2.23 os_index

`unsigned hwloc_obj::os_index`
OS-provided physical index number. It is not guaranteed unique across the entire machine, except for PUs and NUMA nodes. Set to HWLOC_UNKNOWN_INDEX if unknown or irrelevant for this object.

24.17.2.24 parent

`struct hwloc_obj* hwloc_obj::parent`
Parent, `NULL` if root (Machine object)

24.17.2.25 prev_cousin

`struct hwloc_obj* hwloc_obj::prev_cousin`
Previous object of same type and depth.

24.17.2.26 prev_sibling

`struct hwloc_obj* hwloc_obj::prev_sibling`
Previous object below the same parent (inside the same list of children).

24.17.2.27 sibling_rank

`unsigned hwloc_obj::sibling_rank`
Index in parent's `children`[] array. Or the index in parent's Memory, I/O or Misc children list.

24.17.2.28 subtype

`char* hwloc_obj::subtype`
Subtype string to better describe the type field.

24.17.2.29 symmetric_subtree

`int hwloc_obj::symmetric_subtree`
Set if the subtree of normal objects below this object is symmetric, which means all normal children and their children have identical subtrees.
Memory, I/O and Misc children are ignored.
If set in the topology root object, lstopo may export the topology as a synthetic string.

24.17.2.30 total_memory

`hwloc_uint64_t hwloc_obj::total_memory`
Total memory (in bytes) in NUMA nodes below this object.

24.17.2.31 type

`hwloc_obj_type_t hwloc_obj::type`
Type of object.

24.17.2.32 userdata

`void* hwloc_obj::userdata`
Application-given private data pointer, initialized to `NULL`, use it as you wish. See hwloc_topology_set_userdata_export_callback() in hwloc/export.h if you wish to export this field to XML.
The documentation for this struct was generated from the following file:

- hwloc.h

24.18 hwloc_obj_attr_u Union Reference

`#include <hwloc.h>`

Data Structures

- struct hwloc_bridge_attr_s
- struct hwloc_cache_attr_s
- struct hwloc_group_attr_s
- struct hwloc_numanode_attr_s
- struct hwloc_osdev_attr_s
- struct hwloc_pcidev_attr_s

Data Fields

- struct hwloc_obj_attr_u::hwloc_numanode_attr_s numanode
- struct hwloc_obj_attr_u::hwloc_cache_attr_s cache
- struct hwloc_obj_attr_u::hwloc_group_attr_s group
- struct hwloc_obj_attr_u::hwloc_pcidev_attr_s pcidev
- struct hwloc_obj_attr_u::hwloc_bridge_attr_s bridge
- struct hwloc_obj_attr_u::hwloc_osdev_attr_s osdev

24.18.1 Detailed Description

Object type-specific Attributes.

24.18.2 Field Documentation

24.18.2.1 bridge

`struct hwloc_obj_attr_u::hwloc_bridge_attr_s hwloc_obj_attr_u::bridge`

24.18.2.2 cache

`struct hwloc_obj_attr_u::hwloc_cache_attr_s hwloc_obj_attr_u::cache`

24.18.2.3 group

`struct hwloc_obj_attr_u::hwloc_group_attr_s hwloc_obj_attr_u::group`

24.18.2.4 numanode

`struct hwloc_obj_attr_u::hwloc_numanode_attr_s hwloc_obj_attr_u::numanode`

24.18.2.5 osdev

`struct hwloc_obj_attr_u::hwloc_osdev_attr_s hwloc_obj_attr_u::osdev`

24.18.2.6 pcidev

`struct hwloc_obj_attr_u::hwloc_pcidev_attr_s hwloc_obj_attr_u::pcidev`

The documentation for this union was generated from the following file:

- hwloc.h

24.19 hwloc_obj_attr_u::hwloc_osdev_attr_s Struct Reference

```
#include <hwloc.h>
```

Data Fields

- hwloc_obj_osdev_type_t type

24.19.1 Detailed Description

OS Device specific Object Attributes.

24.19.2 Field Documentation

24.19.2.1 type

`hwloc_obj_osdev_type_t hwloc_obj_attr_u::hwloc_osdev_attr_s::type`
OR'ed set of at least one hwloc_obj_osdev_type_e.
The documentation for this struct was generated from the following file:

- hwloc.h

24.20 hwloc_obj_attr_u::hwloc_pcidev_attr_s Struct Reference

`#include <hwloc.h>`

Data Fields

- unsigned int domain
- unsigned char bus
- unsigned char dev
- unsigned char func
- unsigned char prog_if
- unsigned short class_id
- unsigned short vendor_id
- unsigned short device_id
- unsigned short subvendor_id
- unsigned short subdevice_id
- unsigned char revision
- float linkspeed

24.20.1 Detailed Description

PCI Device specific Object Attributes.

24.20.2 Field Documentation

24.20.2.1 bus

`unsigned char hwloc_obj_attr_u::hwloc_pcidev_attr_s::bus`
Bus number (yy in the PCI BDF notation xxxx:yy:zz.t).

24.20.2.2 class_id

`unsigned short hwloc_obj_attr_u::hwloc_pcidev_attr_s::class_id`
The class number (first two bytes, without the prog_if).

24.20.2.3 dev

`unsigned char hwloc_obj_attr_u::hwloc_pcidev_attr_s::dev`
Device number (zz in the PCI BDF notation xxxx:yy:zz.t).

24.20.2.4 device_id

`unsigned short hwloc_obj_attr_u::hwloc_pcidev_attr_s::device_id`
Device ID (yyyy in [xxxx:yyyy]).

24.20.2.5 domain

`unsigned int hwloc_obj_attr_u::hwloc_pcidev_attr_s::domain`
Domain number (xxxx in the PCI BDF notation xxxx:yy:zz.t).

24.20.2.6 func

`unsigned char hwloc_obj_attr_u::hwloc_pcidev_attr_s::func`
Function number (t in the PCI BDF notation xxxx:yy:zz.t).

24.20.2.7 linkspeed

`float hwloc_obj_attr_u::hwloc_pcidev_attr_s::linkspeed`
Link speed in GB/s. This datarate is the currently configured speed of the entire PCI link (sum of the bandwidth of all PCI lanes in that link). It may change during execution since some devices are able to slow their PCI links down when idle.

24.20.2.8 prog_if

`unsigned char hwloc_obj_attr_u::hwloc_pcidev_attr_s::prog_if`
Register-level programming interface number (3rd byte of the class).

24.20.2.9 revision

`unsigned char hwloc_obj_attr_u::hwloc_pcidev_attr_s::revision`
Revision number.

24.20.2.10 subdevice_id

`unsigned short hwloc_obj_attr_u::hwloc_pcidev_attr_s::subdevice_id`
Sub-Device ID.

24.20.2.11 subvendor_id

`unsigned short hwloc_obj_attr_u::hwloc_pcidev_attr_s::subvendor_id`
Sub-Vendor ID.

24.20.2.12 vendor_id

`unsigned short hwloc_obj_attr_u::hwloc_pcidev_attr_s::vendor_id`
Vendor ID (xxxx in [xxxx:yyyy]).
The documentation for this struct was generated from the following file:

- hwloc.h

24.21 hwloc_topology_cpubind_support Struct Reference

`#include <hwloc.h>`

Data Fields

- unsigned char set_thisproc_cpubind
- unsigned char get_thisproc_cpubind
- unsigned char set_proc_cpubind
- unsigned char get_proc_cpubind
- unsigned char set_thisthread_cpubind
- unsigned char get_thisthread_cpubind
- unsigned char set_thread_cpubind
- unsigned char get_thread_cpubind
- unsigned char get_thisproc_last_cpu_location
- unsigned char get_proc_last_cpu_location
- unsigned char get_thisthread_last_cpu_location

24.21.1 Detailed Description

Flags describing actual PU binding support for this topology.
A flag may be set even if the feature isn't supported in all cases (e.g. binding to random sets of non-contiguous objects).

24.21.2 Field Documentation

24.21.2.1 get_proc_cpubind

`unsigned char hwloc_topology_cpubind_support::get_proc_cpubind`
Getting the binding of a whole given process is supported.

24.21.2.2 get_proc_last_cpu_location

`unsigned char hwloc_topology_cpubind_support::get_proc_last_cpu_location`
Getting the last processors where a whole process ran is supported

24.21.2.3 get_thisproc_cpubind

`unsigned char hwloc_topology_cpubind_support::get_thisproc_cpubind`
Getting the binding of the whole current process is supported.

24.21.2.4 get_thisproc_last_cpu_location

`unsigned char hwloc_topology_cpubind_support::get_thisproc_last_cpu_location`
Getting the last processors where the whole current process ran is supported

24.21.2.5 get_thisthread_cpubind

`unsigned char hwloc_topology_cpubind_support::get_thisthread_cpubind`
Getting the binding of the current thread only is supported.

24.21.2.6 get_thisthread_last_cpu_location

`unsigned char hwloc_topology_cpubind_support::get_thisthread_last_cpu_location`
Getting the last processors where the current thread ran is supported

24.21.2.7 get_thread_cpubind

`unsigned char hwloc_topology_cpubind_support::get_thread_cpubind`
Getting the binding of a given thread only is supported.

24.21.2.8 set_proc_cpubind

`unsigned char hwloc_topology_cpubind_support::set_proc_cpubind`
Binding a whole given process is supported.

24.21.2.9 set_thisproc_cpubind

`unsigned char hwloc_topology_cpubind_support::set_thisproc_cpubind`
Binding the whole current process is supported.

24.21.2.10 set_thisthread_cpubind

`unsigned char hwloc_topology_cpubind_support::set_thisthread_cpubind`
Binding the current thread only is supported.

24.21.2.11 set_thread_cpubind

`unsigned char hwloc_topology_cpubind_support::set_thread_cpubind`
Binding a given thread only is supported.
The documentation for this struct was generated from the following file:

- hwloc.h

24.22 hwloc_topology_diff_u::hwloc_topology_diff_generic_s Struct Reference

`#include <diff.h>`

Data Fields

- hwloc_topology_diff_type_t type
- union hwloc_topology_diff_u * next

24.22.1 Field Documentation

24.22.1.1 next

`union hwloc_topology_diff_u* hwloc_topology_diff_u::hwloc_topology_diff_generic_s::next`

24.22.1.2 type

`hwloc_topology_diff_type_t hwloc_topology_diff_u::hwloc_topology_diff_generic_s::type`

The documentation for this struct was generated from the following file:

- diff.h

24.23 hwloc_topology_diff_obj_attr_u::hwloc_topology_diff_obj_attr_generic_s Struct Reference

`#include <diff.h>`

Data Fields

- hwloc_topology_diff_obj_attr_type_t type

24.23.1 Field Documentation

24.23.1.1 type

`hwloc_topology_diff_obj_attr_type_t hwloc_topology_diff_obj_attr_u::hwloc_topology_diff_obj_attr_generic_s::type`

The documentation for this struct was generated from the following file:

- diff.h

24.24 hwloc_topology_diff_u::hwloc_topology_diff_obj_attr_s Struct Reference

`#include <diff.h>`

Data Fields

- hwloc_topology_diff_type_t type
- union hwloc_topology_diff_u * next
- int obj_depth
- unsigned obj_index
- union hwloc_topology_diff_obj_attr_u diff

24.24.1 Field Documentation

24.24.1.1 diff

`union hwloc_topology_diff_obj_attr_u hwloc_topology_diff_u::hwloc_topology_diff_obj_attr_s::diff`

24.24.1.2 next

`union hwloc_topology_diff_u* hwloc_topology_diff_u::hwloc_topology_diff_obj_attr_s::next`

24.24.1.3 obj_depth

```
int hwloc_topology_diff_u::hwloc_topology_diff_obj_attr_s::obj_depth
```

24.24.1.4 obj_index

```
unsigned hwloc_topology_diff_u::hwloc_topology_diff_obj_attr_s::obj_index
```

24.24.1.5 type

```
hwloc_topology_diff_type_t hwloc_topology_diff_u::hwloc_topology_diff_obj_attr_s::type
```

The documentation for this struct was generated from the following file:

- diff.h

24.25 hwloc_topology_diff_obj_attr_u::hwloc_topology_diff_obj_attr_string_s Struct Reference

```
#include <diff.h>
```

Data Fields

- hwloc_topology_diff_obj_attr_type_t type
- char * name
- char * oldvalue
- char * newvalue

24.25.1 Detailed Description

String attribute modification with an optional name.

24.25.2 Field Documentation

24.25.2.1 name

```
char* hwloc_topology_diff_obj_attr_u::hwloc_topology_diff_obj_attr_string_s::name
```

24.25.2.2 newvalue

```
char* hwloc_topology_diff_obj_attr_u::hwloc_topology_diff_obj_attr_string_s::newvalue
```

24.25.2.3 oldvalue

```
char* hwloc_topology_diff_obj_attr_u::hwloc_topology_diff_obj_attr_string_s::oldvalue
```

24.25.2.4 type

```
hwloc_topology_diff_obj_attr_type_t hwloc_topology_diff_obj_attr_u::hwloc_topology_diff_obj_attr_string_s::type
```

The documentation for this struct was generated from the following file:

- diff.h

24.26 hwloc_topology_diff_obj_attr_u Union Reference

`#include <diff.h>`

Data Structures

- struct hwloc_topology_diff_obj_attr_generic_s
- struct hwloc_topology_diff_obj_attr_string_s
- struct hwloc_topology_diff_obj_attr_uint64_s

Data Fields

- struct hwloc_topology_diff_obj_attr_u::hwloc_topology_diff_obj_attr_generic_s generic
- struct hwloc_topology_diff_obj_attr_u::hwloc_topology_diff_obj_attr_uint64_s uint64
- struct hwloc_topology_diff_obj_attr_u::hwloc_topology_diff_obj_attr_string_s string

24.26.1 Detailed Description

One object attribute difference.

24.26.2 Field Documentation

24.26.2.1 generic

`struct hwloc_topology_diff_obj_attr_u::hwloc_topology_diff_obj_attr_generic_s hwloc_topology↩_diff_obj_attr_u::generic`

24.26.2.2 string

`struct hwloc_topology_diff_obj_attr_u::hwloc_topology_diff_obj_attr_string_s hwloc_topology_↩diff_obj_attr_u::string`

24.26.2.3 uint64

`struct hwloc_topology_diff_obj_attr_u::hwloc_topology_diff_obj_attr_uint64_s hwloc_topology_↩diff_obj_attr_u::uint64`

The documentation for this union was generated from the following file:

- diff.h

24.27 hwloc_topology_diff_obj_attr_u::hwloc_topology_diff_obj_attr_↩uint64_s Struct Reference

`#include <diff.h>`

Data Fields

- hwloc_topology_diff_obj_attr_type_t type
- hwloc_uint64_t index
- hwloc_uint64_t oldvalue
- hwloc_uint64_t newvalue

24.27.1 Detailed Description

Integer attribute modification with an optional index.

24.27.2 Field Documentation

24.27.2.1 index

```
hwloc_uint64_t hwloc_topology_diff_obj_attr_u::hwloc_topology_diff_obj_attr_uint64_s::index
```

24.27.2.2 newvalue

```
hwloc_uint64_t hwloc_topology_diff_obj_attr_u::hwloc_topology_diff_obj_attr_uint64_s::newvalue
```

24.27.2.3 oldvalue

```
hwloc_uint64_t hwloc_topology_diff_obj_attr_u::hwloc_topology_diff_obj_attr_uint64_s::oldvalue
```

24.27.2.4 type

```
hwloc_topology_diff_obj_attr_type_t hwloc_topology_diff_obj_attr_u::hwloc_topology_diff_obj_↩
attr_uint64_s::type
```

The documentation for this struct was generated from the following file:

- diff.h

24.28 hwloc_topology_diff_u::hwloc_topology_diff_too_complex_s Struct Reference

```
#include <diff.h>
```

Data Fields

- hwloc_topology_diff_type_t type
- union hwloc_topology_diff_u * next
- int obj_depth
- unsigned obj_index

24.28.1 Field Documentation

24.28.1.1 next

```
union hwloc_topology_diff_u* hwloc_topology_diff_u::hwloc_topology_diff_too_complex_s::next
```

24.28.1.2 obj_depth

```
int hwloc_topology_diff_u::hwloc_topology_diff_too_complex_s::obj_depth
```

24.28.1.3 obj_index

```
unsigned hwloc_topology_diff_u::hwloc_topology_diff_too_complex_s::obj_index
```

24.28.1.4 type

```
hwloc_topology_diff_type_t hwloc_topology_diff_u::hwloc_topology_diff_too_complex_s::type
```

The documentation for this struct was generated from the following file:

- diff.h

24.29 hwloc_topology_diff_u Union Reference

```
#include <diff.h>
```

Data Structures

- struct hwloc_topology_diff_generic_s
- struct hwloc_topology_diff_obj_attr_s
- struct hwloc_topology_diff_too_complex_s

Data Fields

- struct hwloc_topology_diff_u::hwloc_topology_diff_generic_s generic
- struct hwloc_topology_diff_u::hwloc_topology_diff_obj_attr_s obj_attr
- struct hwloc_topology_diff_u::hwloc_topology_diff_too_complex_s too_complex

24.29.1 Detailed Description

One element of a difference list between two topologies.

24.29.2 Field Documentation

24.29.2.1 generic

```
struct hwloc_topology_diff_u::hwloc_topology_diff_generic_s hwloc_topology_diff_u::generic
```

24.29.2.2 obj_attr

```
struct hwloc_topology_diff_u::hwloc_topology_diff_obj_attr_s hwloc_topology_diff_u::obj_attr
```

24.29.2.3 too_complex

```
struct hwloc_topology_diff_u::hwloc_topology_diff_too_complex_s hwloc_topology_diff_u::too_↩
complex
```

The documentation for this union was generated from the following file:

- diff.h

24.30 hwloc_topology_discovery_support Struct Reference

```
#include <hwloc.h>
```

Data Fields

- unsigned char pu
- unsigned char numa
- unsigned char numa_memory
- unsigned char disallowed_pu
- unsigned char disallowed_numa
- unsigned char cpukind_efficiency

24.30.1 Detailed Description

Flags describing actual discovery support for this topology.

24.30.2 Field Documentation

24.30.2.1 cpukind_efficiency

`unsigned char hwloc_topology_discovery_support::cpukind_efficiency`
Detecting the efficiency of CPU kinds is supported, see Kinds of CPU cores.

24.30.2.2 disallowed_numa

`unsigned char hwloc_topology_discovery_support::disallowed_numa`
Detecting and identifying NUMA nodes that are not available to the current process is supported.

24.30.2.3 disallowed_pu

`unsigned char hwloc_topology_discovery_support::disallowed_pu`
Detecting and identifying PU objects that are not available to the current process is supported.

24.30.2.4 numa

`unsigned char hwloc_topology_discovery_support::numa`
Detecting the number of NUMA nodes is supported.

24.30.2.5 numa_memory

`unsigned char hwloc_topology_discovery_support::numa_memory`
Detecting the amount of memory in NUMA nodes is supported.

24.30.2.6 pu

`unsigned char hwloc_topology_discovery_support::pu`
Detecting the number of PU objects is supported.
The documentation for this struct was generated from the following file:

- hwloc.h

24.31 hwloc_topology_membind_support Struct Reference

```
#include <hwloc.h>
```

Data Fields

- unsigned char set_thisproc_membind
- unsigned char get_thisproc_membind
- unsigned char set_proc_membind
- unsigned char get_proc_membind
- unsigned char set_thisthread_membind
- unsigned char get_thisthread_membind
- unsigned char alloc_membind
- unsigned char set_area_membind
- unsigned char get_area_membind
- unsigned char get_area_memlocation
- unsigned char firsttouch_membind
- unsigned char bind_membind
- unsigned char interleave_membind
- unsigned char weighted_interleave_membind
- unsigned char nexttouch_membind
- unsigned char migrate_membind

24.31.1 Detailed Description

Flags describing actual memory binding support for this topology.
A flag may be set even if the feature isn't supported in all cases (e.g. binding to random sets of non-contiguous objects).

24.31.2 Field Documentation

24.31.2.1 alloc_membind

`unsigned char hwloc_topology_membind_support::alloc_membind`
Allocating a bound memory area is supported.

24.31.2.2 bind_membind

`unsigned char hwloc_topology_membind_support::bind_membind`
Bind policy is supported.

24.31.2.3 firsttouch_membind

`unsigned char hwloc_topology_membind_support::firsttouch_membind`
First-touch policy is supported.

24.31.2.4 get_area_membind

`unsigned char hwloc_topology_membind_support::get_area_membind`
Getting the binding of a given memory area is supported.

24.31.2.5 get_area_memlocation

`unsigned char hwloc_topology_membind_support::get_area_memlocation`
Getting the last NUMA nodes where a memory area was allocated is supported

24.31.2.6 get_proc_membind

`unsigned char hwloc_topology_membind_support::get_proc_membind`
Getting the binding of a whole given process is supported.

24.31.2.7 get_thisproc_membind

`unsigned char hwloc_topology_membind_support::get_thisproc_membind`
Getting the binding of the whole current process is supported.

24.31.2.8 get_thisthread_membind

`unsigned char hwloc_topology_membind_support::get_thisthread_membind`
Getting the binding of the current thread only is supported.

24.31.2.9 interleave_membind

`unsigned char hwloc_topology_membind_support::interleave_membind`
Interleave policy is supported.

24.31.2.10 migrate_membind

`unsigned char hwloc_topology_membind_support::migrate_membind`
Migration flags is supported.

24.31.2.11 nexttouch_membind

`unsigned char hwloc_topology_membind_support::nexttouch_membind`
Next-touch migration policy is supported.

24.31.2.12 set_area_membind

`unsigned char hwloc_topology_membind_support::set_area_membind`
Binding a given memory area is supported.

24.31.2.13 set_proc_membind

`unsigned char hwloc_topology_membind_support::set_proc_membind`
Binding a whole given process is supported.

24.31.2.14 set_thisproc_membind

`unsigned char hwloc_topology_membind_support::set_thisproc_membind`
Binding the whole current process is supported.

24.31.2.15 set_thisthread_membind

`unsigned char hwloc_topology_membind_support::set_thisthread_membind`
Binding the current thread only is supported.

24.31.2.16 weighted_interleave_membind

`unsigned char hwloc_topology_membind_support::weighted_interleave_membind`
Weighted interleave policy is supported.
The documentation for this struct was generated from the following file:

- hwloc.h

24.32 hwloc_topology_misc_support Struct Reference

`#include <hwloc.h>`

Data Fields

- unsigned char imported_support

24.32.1 Detailed Description

Flags describing miscellaneous features.

24.32.2 Field Documentation

24.32.2.1 imported_support

`unsigned char hwloc_topology_misc_support::imported_support`
Support was imported when importing another topology, see HWLOC_TOPOLOGY_FLAG_IMPORT_SUPPORT.
The documentation for this struct was generated from the following file:

- hwloc.h

24.33 hwloc_topology_support Struct Reference

`#include <hwloc.h>`

Data Fields

- struct hwloc_topology_discovery_support * discovery
- struct hwloc_topology_cpubind_support * cpubind
- struct hwloc_topology_membind_support * membind
- struct hwloc_topology_misc_support * misc

24.33.1 Detailed Description

Set of flags describing actual support for this topology.
This is retrieved with hwloc_topology_get_support() and will be valid until the topology object is destroyed. Note: the values are correct only after discovery.

24.33.2 Field Documentation

24.33.2.1 cpubind

`struct hwloc_topology_cpubind_support* hwloc_topology_support::cpubind`

24.33.2.2 discovery

`struct hwloc_topology_discovery_support* hwloc_topology_support::discovery`

24.33.2.3 membind

`struct hwloc_topology_membind_support* hwloc_topology_support::membind`

24.33.2.4 misc

`struct hwloc_topology_misc_support* hwloc_topology_support::misc`
The documentation for this struct was generated from the following file:

- hwloc.h

Index

abi
- hwloc_component, 253

Add distances between objects, 185
- hwloc_distances_add_commit, 186
- hwloc_distances_add_create, 186
- hwloc_distances_add_flag_e, 185
- HWLOC_DISTANCES_ADD_FLAG_GROUP, 185
- HWLOC_DISTANCES_ADD_FLAG_GROUP_INACCURATE, 186
- hwloc_distances_add_handle_t, 185
- hwloc_distances_add_values, 186

alloc_membind
- hwloc_topology_membind_support, 278

API version, 86
- HWLOC_API_VERSION, 86
- HWLOC_COMPONENT_ABI, 86
- hwloc_get_api_version, 86

arity
- hwloc_obj, 262

array
- hwloc_infos_s, 258

associativity
- hwloc_obj_attr_u::hwloc_cache_attr_s, 250

attr
- hwloc_obj, 262

bind_membind
- hwloc_topology_membind_support, 278

bridge
- hwloc_obj_attr_u, 267

bus
- hwloc_cl_device_topology_amd, 251
- hwloc_obj_attr_u::hwloc_pcidev_attr_s, 268

cache
- hwloc_obj_attr_u, 267

Changing the Source of Topology Discovery, 121
- HWLOC_TOPOLOGY_COMPONENTS_FLAG_BLACKLIST, 121
- hwloc_topology_components_flag_e, 121
- hwloc_topology_set_components, 121
- hwloc_topology_set_pid, 122
- hwloc_topology_set_synthetic, 122
- hwloc_topology_set_xml, 122
- hwloc_topology_set_xmlbuffer, 123

children
- hwloc_obj, 262

class_id
- hwloc_obj_attr_u::hwloc_pcidev_attr_s, 268

Comparing memory node attributes for finding where to allocate on, 190
- hwloc_get_local_numanode_objs, 193
- HWLOC_LOCAL_NUMANODE_FLAG_ALL, 191
- hwloc_local_numanode_flag_e, 191
- HWLOC_LOCAL_NUMANODE_FLAG_LARGER_LOCALITY, 191
- HWLOC_LOCAL_NUMANODE_FLAG_SMALLER_LOCALITY, 191
- HWLOC_LOCATION_TYPE_CPUSET, 191
- hwloc_location_type_e, 191
- HWLOC_LOCATION_TYPE_OBJECT, 191
- hwloc_memattr_get_best_initiator, 193
- hwloc_memattr_get_best_target, 194
- hwloc_memattr_get_by_name, 194
- hwloc_memattr_get_value, 195
- HWLOC_MEMATTR_ID_BANDWIDTH, 192
- HWLOC_MEMATTR_ID_CAPACITY, 192
- hwloc_memattr_id_e, 191
- HWLOC_MEMATTR_ID_LATENCY, 192
- HWLOC_MEMATTR_ID_LOCALITY, 192
- HWLOC_MEMATTR_ID_READ_BANDWIDTH, 192
- HWLOC_MEMATTR_ID_READ_LATENCY, 193
- hwloc_memattr_id_t, 191
- HWLOC_MEMATTR_ID_WRITE_BANDWIDTH, 192
- HWLOC_MEMATTR_ID_WRITE_LATENCY, 193

complete_cpuset
- hwloc_obj, 262

complete_nodeset
- hwloc_obj, 262

Components and Plugins: Core functions to be used by components, 237
- hwloc__insert_object_by_cpuset, 237
- hwloc_alloc_setup_object, 238
- hwloc_hide_errors, 238
- hwloc_insert_object_by_parent, 238
- hwloc_obj_add_children_sets, 238
- hwloc_plugin_check_namespace, 238
- HWLOC_SHOW_ALL_ERRORS, 237
- HWLOC_SHOW_CRITICAL_ERRORS, 237
- hwloc_topology_reconnect, 239

Components and Plugins: Discovery backends, 234
- hwloc_backend_alloc, 235
- hwloc_backend_enable, 235
- HWLOC_BACKEND_PRIVATE_DATA, 234
- HWLOC_DISC_PHASE_ANNOTATE, 235
- HWLOC_DISC_PHASE_CPU, 235

hwloc_disc_phase_e, 234
HWLOC_DISC_PHASE_GLOBAL, 235
HWLOC_DISC_PHASE_IO, 235
HWLOC_DISC_PHASE_MEMORY, 235
HWLOC_DISC_PHASE_MISC, 235
HWLOC_DISC_PHASE_PCI, 235
hwloc_disc_phase_t, 234
HWLOC_DISC_PHASE_TWEAK, 235
hwloc_disc_status_flag_e, 235
HWLOC_DISC_STATUS_FLAG_GOT_ALLOWED_RESOURCES, 235
Components and Plugins: Discovery components, 233
Components and Plugins: Filtering objects, 240
hwloc_filter_check_keep_object, 240
hwloc_filter_check_keep_object_type, 240
hwloc_filter_check_osdev_subtype_important, 240
hwloc_filter_check_pcidev_subtype_important, 240
Components and Plugins: finding PCI objects during other discoveries, 244
hwloc_backend_distances_add_commit, 244
hwloc_backend_distances_add_create, 244
hwloc_backend_distances_add_handle_t, 244
hwloc_backend_distances_add_values, 244
hwloc_pci_find_by_busid, 245
hwloc_pci_find_parent_by_busid, 245
Components and Plugins: Generic components, 236
HWLOC_COMPONENT_TYPE_DISC, 236
hwloc_component_type_e, 236
hwloc_component_type_t, 236
HWLOC_COMPONENT_TYPE_XML, 236
Components and Plugins: helpers for PCI discovery, 242
hwloc_pcidisc_check_bridge_type, 242
hwloc_pcidisc_find_bridge_buses, 242
hwloc_pcidisc_find_cap, 242
hwloc_pcidisc_find_linkspeed, 242
hwloc_pcidisc_tree_attach, 242
hwloc_pcidisc_tree_insert_by_busid, 243
Consulting and Adding Info Attributes, 105
hwloc_get_info_by_name, 106
hwloc_modify_infos, 106
HWLOC_MODIFY_INFOS_OP_ADD, 105
HWLOC_MODIFY_INFOS_OP_ADD_UNIQUE, 105
hwloc_modify_infos_op_e, 105
HWLOC_MODIFY_INFOS_OP_REMOVE, 105
HWLOC_MODIFY_INFOS_OP_REPLACE, 105
hwloc_obj_add_info, 106
hwloc_obj_get_info_by_name, 107
hwloc_obj_set_subtype, 107
hwloc_topology_get_infos, 107
Converting between CPU sets and node sets, 157
hwloc_cpuset_from_nodeset, 157
hwloc_cpuset_to_nodeset, 157
Converting between Object Types and Attributes, and Strings, 102
hwloc_obj_attr_snprintf, 102
hwloc_obj_snprintf_flag_e, 102
HWLOC_OBJ_SNPRINTF_FLAG_LONG_NAMES, 102
HWLOC_OBJ_SNPRINTF_FLAG_MORE_ATTRS, 102
HWLOC_OBJ_SNPRINTF_FLAG_NO_UNITS, 102
HWLOC_OBJ_SNPRINTF_FLAG_OLD_VERBOSE, 102
HWLOC_OBJ_SNPRINTF_FLAG_SHORT_NAMES, 102
HWLOC_OBJ_SNPRINTF_FLAG_UNITS_1000, 102
hwloc_obj_type_snprintf, 103
hwloc_obj_type_string, 103
hwloc_type_sscanf, 103
count
hwloc_infos_s, 258
hwloc_obj_attr_u::hwloc_numanode_attr_s::hwloc_memory_page_ty 260
CPU and node sets of entire topologies, 154
hwloc_topology_get_allowed_cpuset, 154
hwloc_topology_get_allowed_nodeset, 154
hwloc_topology_get_complete_cpuset, 154
hwloc_topology_get_complete_nodeset, 155
hwloc_topology_get_topology_cpuset, 155
hwloc_topology_get_topology_nodeset, 155
CPU binding, 108
hwloc_cpubind_flags_t, 108
HWLOC_CPUBIND_NOMEMBIND, 109
HWLOC_CPUBIND_PROCESS, 109
HWLOC_CPUBIND_STRICT, 109
HWLOC_CPUBIND_THREAD, 109
hwloc_get_cpubind, 109
hwloc_get_last_cpu_location, 110
hwloc_get_proc_cpubind, 110
hwloc_get_proc_last_cpu_location, 110
hwloc_get_thread_cpubind, 111
hwloc_set_cpubind, 111
hwloc_set_proc_cpubind, 111
hwloc_set_thread_cpubind, 112
cpubind
hwloc_topology_support, 280
cpukind_efficiency
hwloc_topology_discovery_support, 277
cpuset
hwloc_location::hwloc_location_u, 259
hwloc_obj, 263

data
hwloc_cl_device_topology_amd, 252
hwloc_component, 253
depth
hwloc_obj, 263
hwloc_obj_attr_u::hwloc_bridge_attr_s, 249
hwloc_obj_attr_u::hwloc_cache_attr_s, 250
hwloc_obj_attr_u::hwloc_group_attr_s, 257
dev
hwloc_obj_attr_u::hwloc_pcidev_attr_s, 268
device

hwloc_cl_device_topology_amd, 252
device_id
hwloc_obj_attr_u::hwloc_pcidev_attr_s, 269
diff
hwloc_topology_diff_u::hwloc_topology_diff_obj_attr_s, 272
disable
hwloc_backend, 247
disallowed_numa
hwloc_topology_discovery_support, 277
disallowed_pu
hwloc_topology_discovery_support, 277
discover
hwloc_backend, 247
discovery
hwloc_topology_support, 280
Distributing items over a topology, 152
hwloc_distrib, 152
HWLOC_DISTRIB_FLAG_REVERSE, 152
hwloc_distrib_flags_e, 152
domain
hwloc_obj_attr_u::hwloc_bridge_attr_s, 249
hwloc_obj_attr_u::hwloc_pcidev_attr_s, 269
dont_merge
hwloc_obj_attr_u::hwloc_group_attr_s, 257
downstream
hwloc_obj_attr_u::hwloc_bridge_attr_s, 249
downstream_type
hwloc_obj_attr_u::hwloc_bridge_attr_s, 249

enabled_by_default
hwloc_disc_component, 254
Error reporting in the API, 85
excluded_phases
hwloc_disc_component, 254
hwloc_disc_status, 255
Exporting Topologies to Synthetic, 177
hwloc_topology_export_synthetic, 177
HWLOC_TOPOLOGY_EXPORT_SYNTHETIC_FLAG_IGNORE_MEMORY, 177
HWLOC_TOPOLOGY_EXPORT_SYNTHETIC_FLAG_NO_ATTRS, 177
HWLOC_TOPOLOGY_EXPORT_SYNTHETIC_FLAG_NO_EXTENDED_TYPES, 177
HWLOC_TOPOLOGY_EXPORT_SYNTHETIC_FLAG_V1, 177
hwloc_topology_export_synthetic_flags_e, 177
Exporting Topologies to XML, 173
hwloc_export_obj_userdata, 173
hwloc_export_obj_userdata_base64, 174
hwloc_free_xmlbuffer, 174
hwloc_topology_export_xml, 174
HWLOC_TOPOLOGY_EXPORT_XML_FLAG_V2, 173
hwloc_topology_export_xml_flags_e, 173
hwloc_topology_export_xmlbuffer, 175
hwloc_topology_set_userdata_export_callback, 175
hwloc_topology_set_userdata_import_callback, 175

finalize
hwloc_component, 253
Finding I/O objects, 158
hwloc_bridge_covers_pcibus, 158
hwloc_get_next_bridge, 158
hwloc_get_next_osdev, 158
hwloc_get_next_pcidev, 158
hwloc_get_non_io_ancestor_obj, 159
hwloc_get_pcidev_by_busid, 159
hwloc_get_pcidev_by_busidstring, 159
Finding Objects covering at least CPU set, 144
hwloc_get_child_covering_cpuset, 144
hwloc_get_next_obj_covering_cpuset_by_depth, 144
hwloc_get_next_obj_covering_cpuset_by_type, 144
hwloc_get_obj_covering_cpuset, 145
Finding Objects inside a CPU set, 140
hwloc_get_first_largest_obj_inside_cpuset, 140
hwloc_get_largest_objs_inside_cpuset, 140
hwloc_get_nbobjs_inside_cpuset_by_depth, 140
hwloc_get_nbobjs_inside_cpuset_by_type, 141
hwloc_get_next_obj_inside_cpuset_by_depth, 141
hwloc_get_next_obj_inside_cpuset_by_type, 141
hwloc_get_obj_index_inside_cpuset, 142
hwloc_get_obj_inside_cpuset_by_depth, 142
hwloc_get_obj_inside_cpuset_by_type, 143
Finding objects, miscellaneous helpers, 149
hwloc_bitmap_singlify_per_core, 149
hwloc_get_closest_objs, 149
hwloc_get_numanode_obj_by_os_index, 150
hwloc_get_obj_below_array_by_type, 150
hwloc_get_obj_below_by_type, 150
hwloc_get_obj_with_same_locality, 151
hwloc_get_pu_obj_by_os_index, 151
first_child
hwloc_obj, 263
firsttouch_membind
hwloc_topology_membind_support, 278
flags
hwloc_backend, 247
hwloc_component, 253
hwloc_disc_status, 255
func
hwloc_obj_attr_u::hwloc_pcidev_attr_s, 269
function
hwloc_cl_device_topology_amd, 252

generic
hwloc_topology_diff_obj_attr_u, 274
hwloc_topology_diff_u, 276
get_area_membind
hwloc_topology_membind_support, 278
get_area_memlocation
hwloc_topology_membind_support, 278
get_pci_busid_cpuset

hwloc_backend, 248
get_proc_cpubind
hwloc_topology_cpubind_support, 270
get_proc_last_cpu_location
hwloc_topology_cpubind_support, 270
get_proc_membind
hwloc_topology_membind_support, 278
get_thisproc_cpubind
hwloc_topology_cpubind_support, 270
get_thisproc_last_cpu_location
hwloc_topology_cpubind_support, 270
get_thisproc_membind
hwloc_topology_membind_support, 278
get_thisthread_cpubind
hwloc_topology_cpubind_support, 270
get_thisthread_last_cpu_location
hwloc_topology_cpubind_support, 271
get_thisthread_membind
hwloc_topology_membind_support, 279
get_thread_cpubind
hwloc_topology_cpubind_support, 271
gp_index
hwloc_obj, 263
group
hwloc_obj_attr_u, 267

Helpers for consulting distance matrices, 184
hwloc_distances_obj_index, 184
hwloc_distances_obj_pair_values, 184
hwloc__insert_object_by_cpuset
Components and Plugins: Core functions to be used by components, 237
hwloc_alloc
Memory binding, 116
hwloc_alloc_membind
Memory binding, 116
hwloc_alloc_membind_policy
Memory binding, 117
hwloc_alloc_setup_object
Components and Plugins: Core functions to be used by components, 238
HWLOC_ALLOW_FLAG_ALL
Modifying a loaded Topology, 133
HWLOC_ALLOW_FLAG_CUSTOM
Modifying a loaded Topology, 133
HWLOC_ALLOW_FLAG_LOCAL_RESTRICTIONS
Modifying a loaded Topology, 133
hwloc_allow_flags_e
Modifying a loaded Topology, 133
HWLOC_API_VERSION
API version, 86
hwloc_backend, 247
disable, 247
discover, 247
flags, 247
get_pci_busid_cpuset, 248
is_thissystem, 248
phases, 248
hwloc_backend_alloc
Components and Plugins: Discovery backends, 235
hwloc_backend_distances_add_commit
Components and Plugins: finding PCI objects during other discoveries, 244
hwloc_backend_distances_add_create
Components and Plugins: finding PCI objects during other discoveries, 244
hwloc_backend_distances_add_handle_t
Components and Plugins: finding PCI objects during other discoveries, 244
hwloc_backend_distances_add_values
Components and Plugins: finding PCI objects during other discoveries, 244
hwloc_backend_enable
Components and Plugins: Discovery backends, 235
HWLOC_BACKEND_PRIVATE_DATA
Components and Plugins: Discovery backends, 234
hwloc_bitmap_allbut
The bitmap API, 162
hwloc_bitmap_alloc
The bitmap API, 162
hwloc_bitmap_alloc_full
The bitmap API, 162
hwloc_bitmap_and
The bitmap API, 162
hwloc_bitmap_andnot
The bitmap API, 162
hwloc_bitmap_asprintf
The bitmap API, 163
hwloc_bitmap_clr
The bitmap API, 163
hwloc_bitmap_clr_range
The bitmap API, 163
hwloc_bitmap_compare
The bitmap API, 163
hwloc_bitmap_compare_first
The bitmap API, 163
hwloc_bitmap_copy
The bitmap API, 164
hwloc_bitmap_dup
The bitmap API, 164
hwloc_bitmap_fill
The bitmap API, 164
hwloc_bitmap_first
The bitmap API, 164
hwloc_bitmap_first_unset
The bitmap API, 164
hwloc_bitmap_foreach_begin
The bitmap API, 161
hwloc_bitmap_foreach_end
The bitmap API, 161
hwloc_bitmap_free
The bitmap API, 165
hwloc_bitmap_from_ith_ulong
The bitmap API, 165

hwloc_bitmap_from_ulong
The bitmap API, 165
hwloc_bitmap_from_ulongs
The bitmap API, 165
hwloc_bitmap_intersects
The bitmap API, 165
hwloc_bitmap_isequal
The bitmap API, 165
hwloc_bitmap_isfull
The bitmap API, 166
hwloc_bitmap_isincluded
The bitmap API, 166
hwloc_bitmap_isset
The bitmap API, 166
hwloc_bitmap_iszero
The bitmap API, 166
hwloc_bitmap_last
The bitmap API, 166
hwloc_bitmap_last_unset
The bitmap API, 167
hwloc_bitmap_list_asprintf
The bitmap API, 167
hwloc_bitmap_list_snprintf
The bitmap API, 167
hwloc_bitmap_list_sscanf
The bitmap API, 167
hwloc_bitmap_next
The bitmap API, 168
hwloc_bitmap_next_unset
The bitmap API, 168
hwloc_bitmap_not
The bitmap API, 168
hwloc_bitmap_nr_ulongs
The bitmap API, 168
hwloc_bitmap_only
The bitmap API, 168
hwloc_bitmap_or
The bitmap API, 169
hwloc_bitmap_set
The bitmap API, 169
hwloc_bitmap_set_ith_ulong
The bitmap API, 169
hwloc_bitmap_set_range
The bitmap API, 169
hwloc_bitmap_singlify
The bitmap API, 169
hwloc_bitmap_singlify_per_core
Finding objects, miscellaneous helpers, 149
hwloc_bitmap_snprintf
The bitmap API, 170
hwloc_bitmap_sscanf
The bitmap API, 170
hwloc_bitmap_t
The bitmap API, 162
hwloc_bitmap_taskset_asprintf
The bitmap API, 170
hwloc_bitmap_taskset_snprintf
The bitmap API, 170
hwloc_bitmap_taskset_sscanf
The bitmap API, 170
hwloc_bitmap_to_ith_ulong
The bitmap API, 171
hwloc_bitmap_to_ulong
The bitmap API, 171
hwloc_bitmap_to_ulongs
The bitmap API, 171
hwloc_bitmap_weight
The bitmap API, 171
hwloc_bitmap_xor
The bitmap API, 171
hwloc_bitmap_zero
The bitmap API, 171
hwloc_bridge_covers_pcibus
Finding I/O objects, 158
hwloc_cl_device_pci_bus_info_khr, 250
pci_bus, 251
pci_device, 251
pci_domain, 251
pci_function, 251
hwloc_cl_device_topology_amd, 251
bus, 251
data, 252
device, 252
function, 252
pcie, 252
raw, 252
type, 252
unused, 252
hwloc_compare_types
Object Types, 92
hwloc_component, 252
abi, 253
data, 253
finalize, 253
flags, 253
init, 253
type, 253
HWLOC_COMPONENT_ABI
API version, 86
HWLOC_COMPONENT_TYPE_DISC
Components and Plugins: Generic components, 236
hwloc_component_type_e
Components and Plugins: Generic components, 236
hwloc_component_type_t
Components and Plugins: Generic components, 236
HWLOC_COMPONENT_TYPE_XML
Components and Plugins: Generic components, 236
hwloc_const_bitmap_t
The bitmap API, 162
hwloc_const_cpuset_t
Object Sets (hwloc_cpuset_t and hwloc_nodeset_t), 87

hwloc_const_nodeset_t
Object Sets (hwloc_cpuset_t and hwloc_nodeset_t), 87
hwloc_cpubind_flags_t
CPU binding, 108
HWLOC_CPUBIND_NOMEMBIND
CPU binding, 109
HWLOC_CPUBIND_PROCESS
CPU binding, 109
HWLOC_CPUBIND_STRICT
CPU binding, 109
HWLOC_CPUBIND_THREAD
CPU binding, 109
hwloc_cpukinds_get_by_cpuset
Kinds of CPU cores, 200
hwloc_cpukinds_get_info
Kinds of CPU cores, 200
hwloc_cpukinds_get_nr
Kinds of CPU cores, 201
hwloc_cpukinds_register
Kinds of CPU cores, 201
hwloc_cpuset_from_glibc_sched_affinity
Interoperability with glibc sched affinity, 210
hwloc_cpuset_from_linux_libnuma_bitmask
Interoperability with Linux libnuma bitmask, 207
hwloc_cpuset_from_linux_libnuma_ulongs
Interoperability with Linux libnuma unsigned long masks, 205
hwloc_cpuset_from_nodeset
Converting between CPU sets and node sets, 157
hwloc_cpuset_t
Object Sets (hwloc_cpuset_t and hwloc_nodeset_t), 87
hwloc_cpuset_to_glibc_sched_affinity
Interoperability with glibc sched affinity, 210
hwloc_cpuset_to_linux_libnuma_bitmask
Interoperability with Linux libnuma bitmask, 207
hwloc_cpuset_to_linux_libnuma_ulongs
Interoperability with Linux libnuma unsigned long masks, 205
hwloc_cpuset_to_nodeset
Converting between CPU sets and node sets, 157
hwloc_cuda_get_device_cpuset
Interoperability with the CUDA Driver API, 213
hwloc_cuda_get_device_osdev
Interoperability with the CUDA Driver API, 213
hwloc_cuda_get_device_osdev_by_index
Interoperability with the CUDA Driver API, 213
hwloc_cuda_get_device_pci_ids
Interoperability with the CUDA Driver API, 214
hwloc_cuda_get_device_pcidev
Interoperability with the CUDA Driver API, 214
hwloc_cudart_get_device_cpuset
Interoperability with the CUDA Runtime API, 215
hwloc_cudart_get_device_osdev_by_index
Interoperability with the CUDA Runtime API, 215
hwloc_cudart_get_device_pci_ids
Interoperability with the CUDA Runtime API, 215
hwloc_cudart_get_device_pcidev
Interoperability with the CUDA Runtime API, 216
hwloc_disc_component, 254
enabled_by_default, 254
excluded_phases, 254
instantiate, 254
name, 254
phases, 254
priority, 254
HWLOC_DISC_PHASE_ANNOTATE
Components and Plugins: Discovery backends, 235
HWLOC_DISC_PHASE_CPU
Components and Plugins: Discovery backends, 235
hwloc_disc_phase_e
Components and Plugins: Discovery backends, 234
HWLOC_DISC_PHASE_GLOBAL
Components and Plugins: Discovery backends, 235
HWLOC_DISC_PHASE_IO
Components and Plugins: Discovery backends, 235
HWLOC_DISC_PHASE_MEMORY
Components and Plugins: Discovery backends, 235
HWLOC_DISC_PHASE_MISC
Components and Plugins: Discovery backends, 235
HWLOC_DISC_PHASE_PCI
Components and Plugins: Discovery backends, 235
hwloc_disc_phase_t
Components and Plugins: Discovery backends, 234
HWLOC_DISC_PHASE_TWEAK
Components and Plugins: Discovery backends, 235
hwloc_disc_status, 255
excluded_phases, 255
flags, 255
phase, 255
hwloc_disc_status_flag_e
Components and Plugins: Discovery backends, 235
HWLOC_DISC_STATUS_FLAG_GOT_ALLOWED_RESOURCES
Components and Plugins: Discovery backends, 235
hwloc_distances_add_commit
Add distances between objects, 186
hwloc_distances_add_create
Add distances between objects, 186
hwloc_distances_add_flag_e
Add distances between objects, 185
HWLOC_DISTANCES_ADD_FLAG_GROUP
Add distances between objects, 185
HWLOC_DISTANCES_ADD_FLAG_GROUP_INACCURATE

Add distances between objects, 186
hwloc_distances_add_handle_t
Add distances between objects, 185
hwloc_distances_add_values
Add distances between objects, 186
hwloc_distances_get
Retrieve distances between objects, 181
hwloc_distances_get_by_depth
Retrieve distances between objects, 181
hwloc_distances_get_by_name
Retrieve distances between objects, 181
hwloc_distances_get_by_type
Retrieve distances between objects, 182
hwloc_distances_get_name
Retrieve distances between objects, 182
hwloc_distances_kind_e
Retrieve distances between objects, 179
HWLOC_DISTANCES_KIND_FROM_OS
Retrieve distances between objects, 179
HWLOC_DISTANCES_KIND_FROM_USER
Retrieve distances between objects, 179
HWLOC_DISTANCES_KIND_HETEROGENEOUS_TYPES
Retrieve distances between objects, 180
HWLOC_DISTANCES_KIND_VALUE_BANDWIDTH
Retrieve distances between objects, 180
HWLOC_DISTANCES_KIND_VALUE_HOPS
Retrieve distances between objects, 180
HWLOC_DISTANCES_KIND_VALUE_LATENCY
Retrieve distances between objects, 179
hwloc_distances_obj_index
Helpers for consulting distance matrices, 184
hwloc_distances_obj_pair_values
Helpers for consulting distance matrices, 184
hwloc_distances_release
Retrieve distances between objects, 182
hwloc_distances_release_remove
Remove distances between objects, 188
hwloc_distances_remove
Remove distances between objects, 188
hwloc_distances_remove_by_depth
Remove distances between objects, 188
hwloc_distances_remove_by_type
Remove distances between objects, 188
hwloc_distances_s, 255
kind, 256
nbobjs, 256
objs, 256
values, 256
hwloc_distances_transform
Retrieve distances between objects, 182
hwloc_distances_transform_e
Retrieve distances between objects, 180
HWLOC_DISTANCES_TRANSFORM_LINKS
Retrieve distances between objects, 180
HWLOC_DISTANCES_TRANSFORM_MERGE_SWITCH_PORTS
Retrieve distances between objects, 180
HWLOC_DISTANCES_TRANSFORM_REMOVE_NULL
Retrieve distances between objects, 180
HWLOC_DISTANCES_TRANSFORM_TRANSITIVE_CLOSURE
Retrieve distances between objects, 180
hwloc_distrib
Distributing items over a topology, 152
HWLOC_DISTRIB_FLAG_REVERSE
Distributing items over a topology, 152
hwloc_distrib_flags_e
Distributing items over a topology, 152
hwloc_export_obj_userdata
Exporting Topologies to XML, 173
hwloc_export_obj_userdata_base64
Exporting Topologies to XML, 174
hwloc_filter_check_keep_object
Components and Plugins: Filtering objects, 240
hwloc_filter_check_keep_object_type
Components and Plugins: Filtering objects, 240
hwloc_filter_check_osdev_subtype_important
Components and Plugins: Filtering objects, 240
hwloc_filter_check_pcidev_subtype_important
Components and Plugins: Filtering objects, 240
hwloc_free
Memory binding, 117
hwloc_free_xmlbuffer
Exporting Topologies to XML, 174
hwloc_get_ancestor_obj_by_depth
Looking at Ancestor and Child Objects, 146
hwloc_get_ancestor_obj_by_type
Looking at Ancestor and Child Objects, 146
hwloc_get_api_version
API version, 86
hwloc_get_area_membind
Memory binding, 117
hwloc_get_area_memlocation
Memory binding, 118
hwloc_get_cache_covering_cpuset
Looking at Cache Objects, 148
hwloc_get_cache_type_depth
Looking at Cache Objects, 148
hwloc_get_child_covering_cpuset
Finding Objects covering at least CPU set, 144
hwloc_get_closest_objs
Finding objects, miscellaneous helpers, 149
hwloc_get_common_ancestor_obj
Looking at Ancestor and Child Objects, 146
hwloc_get_cpubind
CPU binding, 109
hwloc_get_depth_type
Object levels, depths and types, 98
hwloc_get_first_largest_obj_inside_cpuset
Finding Objects inside a CPU set, 140
hwloc_get_info_by_name
Consulting and Adding Info Attributes, 106
hwloc_get_largest_objs_inside_cpuset
Finding Objects inside a CPU set, 140
hwloc_get_last_cpu_location
CPU binding, 110
hwloc_get_local_numanode_objs

Comparing memory node attributes for finding where to allocate on, 193
hwloc_get_membind
Memory binding, 118
hwloc_get_memory_parents_depth
Object levels, depths and types, 98
hwloc_get_nbobjs_by_depth
Object levels, depths and types, 98
hwloc_get_nbobjs_by_type
Object levels, depths and types, 98
hwloc_get_nbobjs_inside_cpuset_by_depth
Finding Objects inside a CPU set, 140
hwloc_get_nbobjs_inside_cpuset_by_type
Finding Objects inside a CPU set, 141
hwloc_get_next_bridge
Finding I/O objects, 158
hwloc_get_next_child
Looking at Ancestor and Child Objects, 147
hwloc_get_next_obj_by_depth
Object levels, depths and types, 98
hwloc_get_next_obj_by_type
Object levels, depths and types, 99
hwloc_get_next_obj_covering_cpuset_by_depth
Finding Objects covering at least CPU set, 144
hwloc_get_next_obj_covering_cpuset_by_type
Finding Objects covering at least CPU set, 144
hwloc_get_next_obj_inside_cpuset_by_depth
Finding Objects inside a CPU set, 141
hwloc_get_next_obj_inside_cpuset_by_type
Finding Objects inside a CPU set, 141
hwloc_get_next_osdev
Finding I/O objects, 158
hwloc_get_next_pcidev
Finding I/O objects, 158
hwloc_get_non_io_ancestor_obj
Finding I/O objects, 159
hwloc_get_numanode_obj_by_os_index
Finding objects, miscellaneous helpers, 150
hwloc_get_obj_below_array_by_type
Finding objects, miscellaneous helpers, 150
hwloc_get_obj_below_by_type
Finding objects, miscellaneous helpers, 150
hwloc_get_obj_by_depth
Object levels, depths and types, 99
hwloc_get_obj_by_type
Object levels, depths and types, 99
hwloc_get_obj_covering_cpuset
Finding Objects covering at least CPU set, 145
hwloc_get_obj_index_inside_cpuset
Finding Objects inside a CPU set, 142
hwloc_get_obj_inside_cpuset_by_depth
Finding Objects inside a CPU set, 142
hwloc_get_obj_inside_cpuset_by_type
Finding Objects inside a CPU set, 143
hwloc_get_obj_with_same_locality
Finding objects, miscellaneous helpers, 151
hwloc_get_pcidev_by_busid
Finding I/O objects, 159
hwloc_get_pcidev_by_busidstring
Finding I/O objects, 159
hwloc_get_proc_cpubind
CPU binding, 110
hwloc_get_proc_last_cpu_location
CPU binding, 110
hwloc_get_proc_membind
Memory binding, 118
hwloc_get_pu_obj_by_os_index
Finding objects, miscellaneous helpers, 151
hwloc_get_root_obj
Object levels, depths and types, 99
hwloc_get_shared_cache_covering_obj
Looking at Cache Objects, 148
hwloc_get_thread_cpubind
CPU binding, 111
hwloc_get_type_depth
Object levels, depths and types, 100
hwloc_get_type_depth_e
Object levels, depths and types, 97
hwloc_get_type_depth_with_attr
Object levels, depths and types, 100
hwloc_get_type_or_above_depth
Object levels, depths and types, 100
hwloc_get_type_or_below_depth
Object levels, depths and types, 101
hwloc_gl_get_display_by_osdev
Interoperability with OpenGL displays, 222
hwloc_gl_get_display_osdev_by_name
Interoperability with OpenGL displays, 222
hwloc_gl_get_display_osdev_by_port_device
Interoperability with OpenGL displays, 222
hwloc_hide_errors
Components and Plugins: Core functions to be used by components, 238
hwloc_ibv_get_device_cpuset
Interoperability with OpenFabrics, 224
hwloc_ibv_get_device_osdev
Interoperability with OpenFabrics, 224
hwloc_ibv_get_device_osdev_by_name
Interoperability with OpenFabrics, 224
hwloc_info_s, 257
name, 258
value, 258
hwloc_infos_s, 258
array, 258
count, 258
hwloc_insert_object_by_parent
Components and Plugins: Core functions to be used by components, 238
hwloc_levelzero_get_device_cpuset
Interoperability with the oneAPI Level Zero interface., 221
hwloc_levelzero_get_device_osdev
Interoperability with the oneAPI Level Zero interface., 221
hwloc_linux_get_tid_cpubind
Linux-specific helpers, 203

hwloc_linux_get_tid_last_cpu_location
Linux-specific helpers, 203
hwloc_linux_read_path_as_cpumask
Linux-specific helpers, 203
hwloc_linux_set_tid_cpubind
Linux-specific helpers, 204
HWLOC_LOCAL_NUMANODE_FLAG_ALL
Comparing memory node attributes for finding where to allocate on, 191
hwloc_local_numanode_flag_e
Comparing memory node attributes for finding where to allocate on, 191
HWLOC_LOCAL_NUMANODE_FLAG_LARGER_LOCALITY
Comparing memory node attributes for finding where to allocate on, 191
HWLOC_LOCAL_NUMANODE_FLAG_SMALLER_LOCALITY
Comparing memory node attributes for finding where to allocate on, 191
hwloc_location, 258
location, 259
type, 259
hwloc_location::hwloc_location_u, 259
cpuset, 259
object, 259
HWLOC_LOCATION_TYPE_CPUSET
Comparing memory node attributes for finding where to allocate on, 191
hwloc_location_type_e
Comparing memory node attributes for finding where to allocate on, 191
HWLOC_LOCATION_TYPE_OBJECT
Comparing memory node attributes for finding where to allocate on, 191
hwloc_memattr_flag_e
Managing memory attributes, 196
HWLOC_MEMATTR_FLAG_HIGHER_FIRST
Managing memory attributes, 196
HWLOC_MEMATTR_FLAG_LOWER_FIRST
Managing memory attributes, 196
HWLOC_MEMATTR_FLAG_NEED_INITIATOR
Managing memory attributes, 196
hwloc_memattr_get_best_initiator
Comparing memory node attributes for finding where to allocate on, 193
hwloc_memattr_get_best_target
Comparing memory node attributes for finding where to allocate on, 194
hwloc_memattr_get_by_name
Comparing memory node attributes for finding where to allocate on, 194
hwloc_memattr_get_flags
Managing memory attributes, 196
hwloc_memattr_get_initiators
Managing memory attributes, 197
hwloc_memattr_get_name
Managing memory attributes, 197
hwloc_memattr_get_targets
Managing memory attributes, 197
hwloc_memattr_get_value
Comparing memory node attributes for finding where to allocate on, 195
HWLOC_MEMATTR_ID_BANDWIDTH
Comparing memory node attributes for finding where to allocate on, 192
HWLOC_MEMATTR_ID_CAPACITY
Comparing memory node attributes for finding where to allocate on, 192
hwloc_memattr_id_e
Comparing memory node attributes for finding where to allocate on, 191
HWLOC_MEMATTR_ID_LATENCY
Comparing memory node attributes for finding where to allocate on, 192
HWLOC_MEMATTR_ID_LOCALITY
Comparing memory node attributes for finding where to allocate on, 192
HWLOC_MEMATTR_ID_READ_BANDWIDTH
Comparing memory node attributes for finding where to allocate on, 192
HWLOC_MEMATTR_ID_READ_LATENCY
Comparing memory node attributes for finding where to allocate on, 193
hwloc_memattr_id_t
Comparing memory node attributes for finding where to allocate on, 191
HWLOC_MEMATTR_ID_WRITE_BANDWIDTH
Comparing memory node attributes for finding where to allocate on, 192
HWLOC_MEMATTR_ID_WRITE_LATENCY
Comparing memory node attributes for finding where to allocate on, 193
hwloc_memattr_register
Managing memory attributes, 198
hwloc_memattr_set_value
Managing memory attributes, 198
HWLOC_MEMBIND_BIND
Memory binding, 115
HWLOC_MEMBIND_BYNODESET
Memory binding, 115
HWLOC_MEMBIND_DEFAULT
Memory binding, 115
HWLOC_MEMBIND_FIRSTTOUCH
Memory binding, 115
hwloc_membind_flags_t
Memory binding, 114
HWLOC_MEMBIND_INTERLEAVE
Memory binding, 115
HWLOC_MEMBIND_MIGRATE
Memory binding, 114
HWLOC_MEMBIND_MIXED
Memory binding, 116
HWLOC_MEMBIND_NEXTTOUCH
Memory binding, 116
HWLOC_MEMBIND_NOCPUBIND
Memory binding, 114
hwloc_membind_policy_t

Memory binding, 115
HWLOC_MEMBIND_PROCESS
Memory binding, 114
HWLOC_MEMBIND_STRICT
Memory binding, 114
HWLOC_MEMBIND_THREAD
Memory binding, 114
HWLOC_MEMBIND_WEIGHTED_INTERLEAVE
Memory binding, 116
hwloc_modify_infos
Consulting and Adding Info Attributes, 106
HWLOC_MODIFY_INFOS_OP_ADD
Consulting and Adding Info Attributes, 105
HWLOC_MODIFY_INFOS_OP_ADD_UNIQUE
Consulting and Adding Info Attributes, 105
hwloc_modify_infos_op_e
Consulting and Adding Info Attributes, 105
HWLOC_MODIFY_INFOS_OP_REMOVE
Consulting and Adding Info Attributes, 105
HWLOC_MODIFY_INFOS_OP_REPLACE
Consulting and Adding Info Attributes, 105
hwloc_nodeset_from_linux_libnuma_bitmask
Interoperability with Linux libnuma bitmask, 207
hwloc_nodeset_from_linux_libnuma_ulongs
Interoperability with Linux libnuma unsigned long masks, 206
hwloc_nodeset_t
Object Sets (hwloc_cpuset_t and hwloc_nodeset_t), 87
hwloc_nodeset_to_linux_libnuma_bitmask
Interoperability with Linux libnuma bitmask, 208
hwloc_nodeset_to_linux_libnuma_ulongs
Interoperability with Linux libnuma unsigned long masks, 206
hwloc_nvml_get_device_cpuset
Interoperability with the NVIDIA Management Library, 217
hwloc_nvml_get_device_osdev
Interoperability with the NVIDIA Management Library, 217
hwloc_nvml_get_device_osdev_by_index
Interoperability with the NVIDIA Management Library, 217
hwloc_obj, 261
arity, 262
attr, 262
children, 262
complete_cpuset, 262
complete_nodeset, 262
cpuset, 263
depth, 263
first_child, 263
gp_index, 263
infos, 263
io_arity, 264
io_first_child, 264
last_child, 264
logical_index, 264
memory_arity, 264
memory_first_child, 264
misc_arity, 264
misc_first_child, 264
name, 264
next_cousin, 265
next_sibling, 265
nodeset, 265
os_index, 265
parent, 265
prev_cousin, 265
prev_sibling, 265
sibling_rank, 266
subtype, 266
symmetric_subtree, 266
total_memory, 266
type, 266
userdata, 266
hwloc_obj_add_children_sets
Components and Plugins: Core functions to be used by components, 238
hwloc_obj_add_info
Consulting and Adding Info Attributes, 106
hwloc_obj_add_other_obj_sets
Modifying a loaded Topology, 134
hwloc_obj_attr_snprintf
Converting between Object Types and Attributes, and Strings, 102
hwloc_obj_attr_u, 266
bridge, 267
cache, 267
group, 267
numanode, 267
osdev, 267
pcidev, 267
hwloc_obj_attr_u::hwloc_bridge_attr_s, 248
depth, 249
domain, 249
downstream, 249
downstream_type, 249
pci, 249
secondary_bus, 249
subordinate_bus, 249
upstream, 249
upstream_type, 249
hwloc_obj_attr_u::hwloc_cache_attr_s, 250
associativity, 250
depth, 250
linesize, 250
size, 250
type, 250
hwloc_obj_attr_u::hwloc_group_attr_s, 256
depth, 257
dont_merge, 257
kind, 257
subkind, 257
hwloc_obj_attr_u::hwloc_numanode_attr_s, 260
local_memory, 260

page_types, 261
page_types_len, 261
hwloc_obj_attr_u::hwloc_numanode_attr_s::hwloc_memory_page_type_s, 260
count, 260
size, 260
hwloc_obj_attr_u::hwloc_osdev_attr_s, 267
type, 268
hwloc_obj_attr_u::hwloc_pcidev_attr_s, 268
bus, 268
class_id, 268
dev, 268
device_id, 269
domain, 269
func, 269
linkspeed, 269
prog_if, 269
revision, 269
subdevice_id, 269
subvendor_id, 269
vendor_id, 269
HWLOC_OBJ_BRIDGE
Object Types, 91
HWLOC_OBJ_BRIDGE_HOST
Object Types, 89
HWLOC_OBJ_BRIDGE_PCI
Object Types, 89
hwloc_obj_bridge_type_e
Object Types, 89
hwloc_obj_bridge_type_t
Object Types, 88
HWLOC_OBJ_CACHE_DATA
Object Types, 89
HWLOC_OBJ_CACHE_INSTRUCTION
Object Types, 89
hwloc_obj_cache_type_e
Object Types, 89
hwloc_obj_cache_type_t
Object Types, 88
HWLOC_OBJ_CACHE_UNIFIED
Object Types, 89
HWLOC_OBJ_CORE
Object Types, 90
HWLOC_OBJ_DIE
Object Types, 91
hwloc_obj_get_info_by_name
Consulting and Adding Info Attributes, 107
HWLOC_OBJ_GROUP
Object Types, 90
hwloc_obj_is_in_subtree
Looking at Ancestor and Child Objects, 147
HWLOC_OBJ_L1CACHE
Object Types, 90
HWLOC_OBJ_L1ICACHE
Object Types, 90
HWLOC_OBJ_L2CACHE
Object Types, 90
HWLOC_OBJ_L2ICACHE
Object Types, 90
HWLOC_OBJ_L3CACHE
Object Types, 90
HWLOC_OBJ_L3ICACHE
Object Types, 90
HWLOC_OBJ_L4CACHE
Object Types, 90
HWLOC_OBJ_L5CACHE
Object Types, 90
HWLOC_OBJ_MACHINE
Object Types, 90
HWLOC_OBJ_MEMCACHE
Object Types, 91
HWLOC_OBJ_MISC
Object Types, 91
HWLOC_OBJ_NUMANODE
Object Types, 91
HWLOC_OBJ_OS_DEVICE
Object Types, 91
HWLOC_OBJ_OSDEV_COPROC
Object Types, 89
HWLOC_OBJ_OSDEV_DMA
Object Types, 90
HWLOC_OBJ_OSDEV_GPU
Object Types, 89
HWLOC_OBJ_OSDEV_MEMORY
Object Types, 89
HWLOC_OBJ_OSDEV_NETWORK
Object Types, 90
HWLOC_OBJ_OSDEV_OPENFABRICS
Object Types, 90
HWLOC_OBJ_OSDEV_STORAGE
Object Types, 89
hwloc_obj_osdev_type_e
Object Types, 89
hwloc_obj_osdev_type_t
Object Types, 88
HWLOC_OBJ_PACKAGE
Object Types, 90
HWLOC_OBJ_PCI_DEVICE
Object Types, 91
HWLOC_OBJ_PU
Object Types, 90
hwloc_obj_set_subtype
Consulting and Adding Info Attributes, 107
hwloc_obj_snprintf_flag_e
Converting between Object Types and Attributes, and Strings, 102
HWLOC_OBJ_SNPRINTF_FLAG_LONG_NAMES
Converting between Object Types and Attributes, and Strings, 102
HWLOC_OBJ_SNPRINTF_FLAG_MORE_ATTRS
Converting between Object Types and Attributes, and Strings, 102
HWLOC_OBJ_SNPRINTF_FLAG_NO_UNITS
Converting between Object Types and Attributes, and Strings, 102
HWLOC_OBJ_SNPRINTF_FLAG_OLD_VERBOSE

Converting between Object Types and Attributes, and Strings, 102
HWLOC_OBJ_SNPRINTF_FLAG_SHORT_NAMES
Converting between Object Types and Attributes, and Strings, 102
HWLOC_OBJ_SNPRINTF_FLAG_UNITS_1000
Converting between Object Types and Attributes, and Strings, 102
hwloc_obj_t
Object Structure and Attributes, 93
hwloc_obj_type_is_cache
Kinds of object Type, 138
hwloc_obj_type_is_dcache
Kinds of object Type, 138
hwloc_obj_type_is_icache
Kinds of object Type, 138
hwloc_obj_type_is_io
Kinds of object Type, 138
hwloc_obj_type_is_memory
Kinds of object Type, 139
hwloc_obj_type_is_normal
Kinds of object Type, 139
hwloc_obj_type_snprintf
Converting between Object Types and Attributes, and Strings, 103
hwloc_obj_type_string
Converting between Object Types and Attributes, and Strings, 103
hwloc_obj_type_t
Object Types, 90
hwloc_opencl_get_device_cpuset
Interoperability with OpenCL, 211
hwloc_opencl_get_device_osdev
Interoperability with OpenCL, 211
hwloc_opencl_get_device_osdev_by_index
Interoperability with OpenCL, 212
hwloc_opencl_get_device_pci_busid
Interoperability with OpenCL, 212
hwloc_pci_find_by_busid
Components and Plugins: finding PCI objects during other discoveries, 245
hwloc_pci_find_parent_by_busid
Components and Plugins: finding PCI objects during other discoveries, 245
hwloc_pcidisc_check_bridge_type
Components and Plugins: helpers for PCI discovery, 242
hwloc_pcidisc_find_bridge_buses
Components and Plugins: helpers for PCI discovery, 242
hwloc_pcidisc_find_cap
Components and Plugins: helpers for PCI discovery, 242
hwloc_pcidisc_find_linkspeed
Components and Plugins: helpers for PCI discovery, 242
hwloc_pcidisc_tree_attach
Components and Plugins: helpers for PCI discovery, 242
hwloc_pcidisc_tree_insert_by_busid
Components and Plugins: helpers for PCI discovery, 243
hwloc_plugin_check_namespace
Components and Plugins: Core functions to be used by components, 238
HWLOC_RESTRICT_FLAG_ADAPT_IO
Modifying a loaded Topology, 134
HWLOC_RESTRICT_FLAG_ADAPT_MISC
Modifying a loaded Topology, 134
HWLOC_RESTRICT_FLAG_BYNODESET
Modifying a loaded Topology, 134
HWLOC_RESTRICT_FLAG_REMOVE_CPULESS
Modifying a loaded Topology, 134
HWLOC_RESTRICT_FLAG_REMOVE_MEMLESS
Modifying a loaded Topology, 134
hwloc_restrict_flags_e
Modifying a loaded Topology, 133
hwloc_rsmi_get_device_cpuset
Interoperability with the ROCm SMI Management Library, 219
hwloc_rsmi_get_device_osdev
Interoperability with the ROCm SMI Management Library, 219
hwloc_rsmi_get_device_osdev_by_index
Interoperability with the ROCm SMI Management Library, 219
hwloc_set_area_membind
Memory binding, 119
hwloc_set_cpubind
CPU binding, 111
hwloc_set_membind
Memory binding, 119
hwloc_set_proc_cpubind
CPU binding, 111
hwloc_set_proc_membind
Memory binding, 120
hwloc_set_thread_cpubind
CPU binding, 112
hwloc_shmem_topology_adopt
Sharing topologies between processes, 231
hwloc_shmem_topology_get_length
Sharing topologies between processes, 232
hwloc_shmem_topology_write
Sharing topologies between processes, 232
HWLOC_SHOW_ALL_ERRORS
Components and Plugins: Core functions to be used by components, 237
HWLOC_SHOW_CRITICAL_ERRORS
Components and Plugins: Core functions to be used by components, 237
hwloc_topology_abi_check
Topology Creation and Destruction, 94
hwloc_topology_alloc_group_object
Modifying a loaded Topology, 134
hwloc_topology_allow

Modifying a loaded Topology, 135
hwloc_topology_check
Topology Creation and Destruction, 94
HWLOC_TOPOLOGY_COMPONENTS_FLAG_BLACKLIST
Changing the Source of Topology Discovery, 121
hwloc_topology_components_flag_e
Changing the Source of Topology Discovery, 121
hwloc_topology_cpubind_support, 270
get_proc_cpubind, 270
get_proc_last_cpu_location, 270
get_thisproc_cpubind, 270
get_thisproc_last_cpu_location, 270
get_thisthread_cpubind, 270
get_thisthread_last_cpu_location, 271
get_thread_cpubind, 271
set_proc_cpubind, 271
set_thisproc_cpubind, 271
set_thisthread_cpubind, 271
set_thread_cpubind, 271
hwloc_topology_destroy
Topology Creation and Destruction, 95
hwloc_topology_diff_apply
Topology differences, 228
hwloc_topology_diff_apply_flags_e
Topology differences, 227
HWLOC_TOPOLOGY_DIFF_APPLY_REVERSE
Topology differences, 227
hwloc_topology_diff_build
Topology differences, 228
hwloc_topology_diff_destroy
Topology differences, 228
hwloc_topology_diff_export_xml
Topology differences, 229
hwloc_topology_diff_export_xmlbuffer
Topology differences, 229
hwloc_topology_diff_load_xml
Topology differences, 229
hwloc_topology_diff_load_xmlbuffer
Topology differences, 230
HWLOC_TOPOLOGY_DIFF_OBJ_ATTR
Topology differences, 227
HWLOC_TOPOLOGY_DIFF_OBJ_ATTR_INFO
Topology differences, 227
HWLOC_TOPOLOGY_DIFF_OBJ_ATTR_NAME
Topology differences, 227
HWLOC_TOPOLOGY_DIFF_OBJ_ATTR_SIZE
Topology differences, 227
hwloc_topology_diff_obj_attr_type_e
Topology differences, 227
hwloc_topology_diff_obj_attr_type_t
Topology differences, 226
hwloc_topology_diff_obj_attr_u, 274
generic, 274
string, 274
uint64, 274
hwloc_topology_diff_obj_attr_u::hwloc_topology_diff_obj_attr_generic_s, 272
type, 272
hwloc_topology_diff_obj_attr_u::hwloc_topology_diff_obj_attr_string_s, 273
name, 273
newvalue, 273
oldvalue, 273
type, 273
hwloc_topology_diff_obj_attr_u::hwloc_topology_diff_obj_attr_uint64_s, 274
index, 275
newvalue, 275
oldvalue, 275
type, 275
hwloc_topology_diff_t
Topology differences, 226
HWLOC_TOPOLOGY_DIFF_TOO_COMPLEX
Topology differences, 227
hwloc_topology_diff_type_e
Topology differences, 227
hwloc_topology_diff_type_t
Topology differences, 227
hwloc_topology_diff_u, 276
generic, 276
obj_attr, 276
too_complex, 276
hwloc_topology_diff_u::hwloc_topology_diff_generic_s, 271
next, 271
type, 271
hwloc_topology_diff_u::hwloc_topology_diff_obj_attr_s, 272
diff, 272
next, 272
obj_depth, 272
obj_index, 273
type, 273
hwloc_topology_diff_u::hwloc_topology_diff_too_complex_s, 275
next, 275
obj_depth, 275
obj_index, 275
type, 276
hwloc_topology_discovery_support, 276
cpukind_efficiency, 277
disallowed_numa, 277
disallowed_pu, 277
numa, 277
numa_memory, 277
pu, 277
hwloc_topology_dup
Topology Creation and Destruction, 95
hwloc_topology_export_synthetic
Exporting Topologies to Synthetic, 177
HWLOC_TOPOLOGY_EXPORT_SYNTHETIC_FLAG_IGNORE_MEMOR
Exporting Topologies to Synthetic, 177
HWLOC_TOPOLOGY_EXPORT_SYNTHETIC_FLAG_NO_ATTRS
Exporting Topologies to Synthetic, 177
HWLOC_TOPOLOGY_EXPORT_SYNTHETIC_FLAG_NO_EXTENDED_T
Exporting Topologies to Synthetic, 177

HWLOC_TOPOLOGY_EXPORT_SYNTHETIC_FLAG_V1
Exporting Topologies to Synthetic, 177
hwloc_topology_export_synthetic_flags_e
Exporting Topologies to Synthetic, 177
hwloc_topology_export_xml
Exporting Topologies to XML, 174
HWLOC_TOPOLOGY_EXPORT_XML_FLAG_V2
Exporting Topologies to XML, 173
hwloc_topology_export_xml_flags_e
Exporting Topologies to XML, 173
hwloc_topology_export_xmlbuffer
Exporting Topologies to XML, 175
HWLOC_TOPOLOGY_FLAG_DONT_CHANGE_BINDING
Topology Detection Configuration and Query, 127
HWLOC_TOPOLOGY_FLAG_IMPORT_SUPPORT
Topology Detection Configuration and Query, 126
HWLOC_TOPOLOGY_FLAG_INCLUDE_DISALLOWED
Topology Detection Configuration and Query, 125
HWLOC_TOPOLOGY_FLAG_IS_THISSYSTEM
Topology Detection Configuration and Query, 125
HWLOC_TOPOLOGY_FLAG_NO_CPUKINDS
Topology Detection Configuration and Query, 128
HWLOC_TOPOLOGY_FLAG_NO_DISTANCES
Topology Detection Configuration and Query, 127
HWLOC_TOPOLOGY_FLAG_NO_MEMATTRS
Topology Detection Configuration and Query, 128
HWLOC_TOPOLOGY_FLAG_RESTRICT_TO_CPUBINDING
Topology Detection Configuration and Query, 127
HWLOC_TOPOLOGY_FLAG_RESTRICT_TO_MEMBINDING
Topology Detection Configuration and Query, 127
HWLOC_TOPOLOGY_FLAG_THISSYSTEM_ALLOWED_RESOURCES
Topology Detection Configuration and Query, 126
hwloc_topology_flags_e
Topology Detection Configuration and Query, 124
hwloc_topology_free_group_object
Modifying a loaded Topology, 135
hwloc_topology_get_allowed_cpuset
CPU and node sets of entire topologies, 154
hwloc_topology_get_allowed_nodeset
CPU and node sets of entire topologies, 154
hwloc_topology_get_complete_cpuset
CPU and node sets of entire topologies, 154
hwloc_topology_get_complete_nodeset
CPU and node sets of entire topologies, 155
hwloc_topology_get_depth
Object levels, depths and types, 101
hwloc_topology_get_flags
Topology Detection Configuration and Query, 128
hwloc_topology_get_infos
Consulting and Adding Info Attributes, 107
hwloc_topology_get_support
Topology Detection Configuration and Query, 129
hwloc_topology_get_topology_cpuset
CPU and node sets of entire topologies, 155
hwloc_topology_get_topology_nodeset
CPU and node sets of entire topologies, 155
hwloc_topology_get_type_filter
Topology Detection Configuration and Query, 129
hwloc_topology_get_userdata
Topology Detection Configuration and Query, 129
hwloc_topology_init
Topology Creation and Destruction, 95
hwloc_topology_insert_group_object
Modifying a loaded Topology, 135
hwloc_topology_insert_misc_object
Modifying a loaded Topology, 136
hwloc_topology_is_thissystem
Topology Detection Configuration and Query, 130
hwloc_topology_load
Topology Creation and Destruction, 95
hwloc_topology_membind_support, 277
alloc_membind, 278
bind_membind, 278
firsttouch_membind, 278
get_area_membind, 278
get_area_memlocation, 278
get_proc_membind, 278
get_thisproc_membind, 278
get_thisthread_membind, 279
interleave_membind, 279
migrate_membind, 279
nexttouch_membind, 279
set_area_membind, 279
set_proc_membind, 279
set_thisproc_membind, 279
set_thisthread_membind, 279
weighted_interleave_membind, 279
hwloc_topology_misc_support, 279
unbounded, 280
hwloc_topology_reconnect
Components and Plugins: Core functions to be used by components, 239
hwloc_topology_refresh
Modifying a loaded Topology, 137
hwloc_topology_restrict
Modifying a loaded Topology, 137
hwloc_topology_set_all_types_filter
Topology Detection Configuration and Query, 130
hwloc_topology_set_cache_types_filter
Topology Detection Configuration and Query, 130
hwloc_topology_set_components
Changing the Source of Topology Discovery, 121
hwloc_topology_set_flags
Topology Detection Configuration and Query, 130
hwloc_topology_set_icache_types_filter
Topology Detection Configuration and Query, 131
hwloc_topology_set_io_types_filter
Topology Detection Configuration and Query, 131
hwloc_topology_set_pid
Changing the Source of Topology Discovery, 122
hwloc_topology_set_synthetic
Changing the Source of Topology Discovery, 122
hwloc_topology_set_type_filter
Topology Detection Configuration and Query, 131
hwloc_topology_set_userdata
Topology Detection Configuration and Query, 131

hwloc_topology_set_userdata_export_callback
Exporting Topologies to XML, 175
hwloc_topology_set_userdata_import_callback
Exporting Topologies to XML, 175
hwloc_topology_set_xml
Changing the Source of Topology Discovery, 122
hwloc_topology_set_xmlbuffer
Changing the Source of Topology Discovery, 123
hwloc_topology_support, 280
cpubind, 280
discovery, 280
membind, 280
misc, 280
hwloc_topology_t
Topology Creation and Destruction, 94
HWLOC_TYPE_DEPTH_BRIDGE
Object levels, depths and types, 97
HWLOC_TYPE_DEPTH_MEMCACHE
Object levels, depths and types, 97
HWLOC_TYPE_DEPTH_MISC
Object levels, depths and types, 97
HWLOC_TYPE_DEPTH_MULTIPLE
Object levels, depths and types, 97
HWLOC_TYPE_DEPTH_NUMANODE
Object levels, depths and types, 97
HWLOC_TYPE_DEPTH_OS_DEVICE
Object levels, depths and types, 97
HWLOC_TYPE_DEPTH_PCI_DEVICE
Object levels, depths and types, 97
HWLOC_TYPE_DEPTH_UNKNOWN
Object levels, depths and types, 97
hwloc_type_filter_e
Topology Detection Configuration and Query, 128
HWLOC_TYPE_FILTER_KEEP_ALL
Topology Detection Configuration and Query, 128
HWLOC_TYPE_FILTER_KEEP_IMPORTANT
Topology Detection Configuration and Query, 128
HWLOC_TYPE_FILTER_KEEP_NONE
Topology Detection Configuration and Query, 128
HWLOC_TYPE_FILTER_KEEP_STRUCTURE
Topology Detection Configuration and Query, 128
hwloc_type_sscanf
Converting between Object Types and Attributes, and Strings, 103
HWLOC_TYPE_UNORDERED
Object Types, 88
hwloc_windows_get_nr_processor_groups
Windows-specific helpers, 209
hwloc_windows_get_processor_group_cpuset
Windows-specific helpers, 209

imported_support
hwloc_topology_misc_support, 280
index
hwloc_topology_diff_obj_attr_u::hwloc_topology_diff_obj_attr_u64_s, 275
infos
hwloc_obj, 263
init
hwloc_component, 253
instantiate
hwloc_disc_component, 254
interleave_membind
hwloc_topology_membind_support, 279
Interoperability with glibc sched affinity, 210
hwloc_cpuset_from_glibc_sched_affinity, 210
hwloc_cpuset_to_glibc_sched_affinity, 210
Interoperability with Linux libnuma bitmask, 207
hwloc_cpuset_from_linux_libnuma_bitmask, 207
hwloc_cpuset_to_linux_libnuma_bitmask, 207
hwloc_nodeset_from_linux_libnuma_bitmask, 207
hwloc_nodeset_to_linux_libnuma_bitmask, 208
Interoperability with Linux libnuma unsigned long masks, 205
hwloc_cpuset_from_linux_libnuma_ulongs, 205
hwloc_cpuset_to_linux_libnuma_ulongs, 205
hwloc_nodeset_from_linux_libnuma_ulongs, 206
hwloc_nodeset_to_linux_libnuma_ulongs, 206
Interoperability with OpenCL, 211
hwloc_opencl_get_device_cpuset, 211
hwloc_opencl_get_device_osdev, 211
hwloc_opencl_get_device_osdev_by_index, 212
hwloc_opencl_get_device_pci_busid, 212
Interoperability with OpenFabrics, 224
hwloc_ibv_get_device_cpuset, 224
hwloc_ibv_get_device_osdev, 224
hwloc_ibv_get_device_osdev_by_name, 224
Interoperability with OpenGL displays, 222
hwloc_gl_get_display_by_osdev, 222
hwloc_gl_get_display_osdev_by_name, 222
hwloc_gl_get_display_osdev_by_port_device, 222
Interoperability with the CUDA Driver API, 213
hwloc_cuda_get_device_cpuset, 213
hwloc_cuda_get_device_osdev, 213
hwloc_cuda_get_device_osdev_by_index, 213
hwloc_cuda_get_device_pci_ids, 214
hwloc_cuda_get_device_pcidev, 214
Interoperability with the CUDA Runtime API, 215
hwloc_cudart_get_device_cpuset, 215
hwloc_cudart_get_device_osdev_by_index, 215
hwloc_cudart_get_device_pci_ids, 215
hwloc_cudart_get_device_pcidev, 216
Interoperability with the NVIDIA Management Library, 217
hwloc_nvml_get_device_cpuset, 217
hwloc_nvml_get_device_osdev, 217
hwloc_nvml_get_device_osdev_by_index, 217
Interoperability with the oneAPI Level Zero interface., 221
hwloc_levelzero_get_device_cpuset, 221
hwloc_levelzero_get_device_osdev, 221
Interoperability with the ROCm SMI Management Library, 219
hwloc_rsmi_get_device_cpuset, 219
hwloc_rsmi_get_device_osdev, 219
hwloc_rsmi_get_device_osdev_by_index, 219
io_arity

hwloc_obj, 264
io_first_child
hwloc_obj, 264
is_thissystem
hwloc_backend, 248

kind
hwloc_distances_s, 256
hwloc_obj_attr_u::hwloc_group_attr_s, 257
Kinds of CPU cores, 200
hwloc_cpukinds_get_by_cpuset, 200
hwloc_cpukinds_get_info, 200
hwloc_cpukinds_get_nr, 201
hwloc_cpukinds_register, 201
Kinds of object Type, 138
hwloc_obj_type_is_cache, 138
hwloc_obj_type_is_dcache, 138
hwloc_obj_type_is_icache, 138
hwloc_obj_type_is_io, 138
hwloc_obj_type_is_memory, 139
hwloc_obj_type_is_normal, 139

last_child
hwloc_obj, 264
linesize
hwloc_obj_attr_u::hwloc_cache_attr_s, 250
linkspeed
hwloc_obj_attr_u::hwloc_pcidev_attr_s, 269
Linux-specific helpers, 203
hwloc_linux_get_tid_cpubind, 203
hwloc_linux_get_tid_last_cpu_location, 203
hwloc_linux_read_path_as_cpumask, 203
hwloc_linux_set_tid_cpubind, 204
local_memory
hwloc_obj_attr_u::hwloc_numanode_attr_s, 260
location
hwloc_location, 259
logical_index
hwloc_obj, 264
Looking at Ancestor and Child Objects, 146
hwloc_get_ancestor_obj_by_depth, 146
hwloc_get_ancestor_obj_by_type, 146
hwloc_get_common_ancestor_obj, 146
hwloc_get_next_child, 147
hwloc_obj_is_in_subtree, 147
Looking at Cache Objects, 148
hwloc_get_cache_covering_cpuset, 148
hwloc_get_cache_type_depth, 148
hwloc_get_shared_cache_covering_obj, 148

Managing memory attributes, 196
hwloc_memattr_flag_e, 196
HWLOC_MEMATTR_FLAG_HIGHER_FIRST, 196
HWLOC_MEMATTR_FLAG_LOWER_FIRST, 196
HWLOC_MEMATTR_FLAG_NEED_INITIATOR, 196
hwloc_memattr_get_flags, 196
hwloc_memattr_get_initiators, 197
hwloc_memattr_get_name, 197
hwloc_memattr_get_targets, 197
hwloc_memattr_register, 198
hwloc_memattr_set_value, 198
membind
hwloc_topology_support, 280
Memory binding, 113
hwloc_alloc, 116
hwloc_alloc_membind, 116
hwloc_alloc_membind_policy, 117
hwloc_free, 117
hwloc_get_area_membind, 117
hwloc_get_area_memlocation, 118
hwloc_get_membind, 118
hwloc_get_proc_membind, 118
HWLOC_MEMBIND_BIND, 115
HWLOC_MEMBIND_BYNODESET, 115
HWLOC_MEMBIND_DEFAULT, 115
HWLOC_MEMBIND_FIRSTTOUCH, 115
hwloc_membind_flags_t, 114
HWLOC_MEMBIND_INTERLEAVE, 115
HWLOC_MEMBIND_MIGRATE, 114
HWLOC_MEMBIND_MIXED, 116
HWLOC_MEMBIND_NEXTTOUCH, 116
HWLOC_MEMBIND_NOCPUBIND, 114
hwloc_membind_policy_t, 115
HWLOC_MEMBIND_PROCESS, 114
HWLOC_MEMBIND_STRICT, 114
HWLOC_MEMBIND_THREAD, 114
HWLOC_MEMBIND_WEIGHTED_INTERLEAVE, 116
hwloc_set_area_membind, 119
hwloc_set_membind, 119
hwloc_set_proc_membind, 120
memory_arity
hwloc_obj, 264
memory_first_child
hwloc_obj, 264
migrate_membind
hwloc_topology_membind_support, 279
misc
hwloc_topology_support, 280
misc_arity
hwloc_obj, 264
misc_first_child
hwloc_obj, 264
Modifying a loaded Topology, 133
HWLOC_ALLOW_FLAG_ALL, 133
HWLOC_ALLOW_FLAG_CUSTOM, 133
HWLOC_ALLOW_FLAG_LOCAL_RESTRICTIONS, 133
hwloc_allow_flags_e, 133
hwloc_obj_add_other_obj_sets, 134
HWLOC_RESTRICT_FLAG_ADAPT_IO, 134
HWLOC_RESTRICT_FLAG_ADAPT_MISC, 134
HWLOC_RESTRICT_FLAG_BYNODESET, 134
HWLOC_RESTRICT_FLAG_REMOVE_CPULESS, 134

HWLOC_RESTRICT_FLAG_REMOVE_MEMLESS, 134
hwloc_restrict_flags_e, 133
hwloc_topology_alloc_group_object, 134
hwloc_topology_allow, 135
hwloc_topology_free_group_object, 135
hwloc_topology_insert_group_object, 135
hwloc_topology_insert_misc_object, 136
hwloc_topology_refresh, 137
hwloc_topology_restrict, 137

name
hwloc_disc_component, 254
hwloc_info_s, 258
hwloc_obj, 264
hwloc_topology_diff_obj_attr_u::hwloc_topology_diff_obj_attr_string_s, 273
nbobjs
hwloc_distances_s, 256
newvalue
hwloc_topology_diff_obj_attr_u::hwloc_topology_diff_obj_attr_string_s, 273
hwloc_topology_diff_obj_attr_u::hwloc_topology_diff_obj_attr_uint64_s, 275
next
hwloc_topology_diff_u::hwloc_topology_diff_generic_s, 271
hwloc_topology_diff_u::hwloc_topology_diff_obj_attr_s, 272
hwloc_topology_diff_u::hwloc_topology_diff_too_complex_s, 275
next_cousin
hwloc_obj, 265
next_sibling
hwloc_obj, 265
nexttouch_membind
hwloc_topology_membind_support, 279
nodeset
hwloc_obj, 265
numa
hwloc_topology_discovery_support, 277
numa_memory
hwloc_topology_discovery_support, 277
numanode
hwloc_obj_attr_u, 267

obj_attr
hwloc_topology_diff_u, 276
obj_depth
hwloc_topology_diff_u::hwloc_topology_diff_obj_attr_s, 272
hwloc_topology_diff_u::hwloc_topology_diff_too_complex_s, 275
obj_index
hwloc_topology_diff_u::hwloc_topology_diff_obj_attr_s, 273
hwloc_topology_diff_u::hwloc_topology_diff_too_complex_s, 275
object
hwloc_location::hwloc_location_u, 259
Object levels, depths and types, 97
hwloc_get_depth_type, 98
hwloc_get_memory_parents_depth, 98
hwloc_get_nbobjs_by_depth, 98
hwloc_get_nbobjs_by_type, 98
hwloc_get_next_obj_by_depth, 98
hwloc_get_next_obj_by_type, 99
hwloc_get_obj_by_depth, 99
hwloc_get_obj_by_type, 99
hwloc_get_root_obj, 99
hwloc_get_type_depth, 100
hwloc_get_type_depth_e, 97
hwloc_get_type_depth_with_attr, 100
hwloc_get_type_or_above_depth, 100
hwloc_get_type_or_below_depth, 101
hwloc_topology_get_depth, 101
HWLOC_TYPE_DEPTH_BRIDGE, 97
HWLOC_TYPE_DEPTH_MEMCACHE, 97
HWLOC_TYPE_DEPTH_MISC, 97
HWLOC_TYPE_DEPTH_MULTIPLE, 97
HWLOC_TYPE_DEPTH_NUMANODE, 97
HWLOC_TYPE_DEPTH_OS_DEVICE, 97
HWLOC_TYPE_DEPTH_PCI_DEVICE, 97
HWLOC_TYPE_DEPTH_UNKNOWN, 97
Object Sets (hwloc_cpuset_t and hwloc_nodeset_t), 87
hwloc_const_cpuset_t, 87
hwloc_const_nodeset_t, 87
hwloc_cpuset_t, 87
hwloc_nodeset_t, 87
Object Structure and Attributes, 93
hwloc_obj_t, 93
Object Types, 88
hwloc_compare_types, 92
HWLOC_OBJ_BRIDGE, 91
HWLOC_OBJ_BRIDGE_HOST, 89
HWLOC_OBJ_BRIDGE_PCI, 89
hwloc_obj_bridge_type_e, 89
hwloc_obj_bridge_type_t, 88
HWLOC_OBJ_CACHE_DATA, 89
HWLOC_OBJ_CACHE_INSTRUCTION, 89
hwloc_obj_cache_type_e, 89
hwloc_obj_cache_type_t, 88
HWLOC_OBJ_CACHE_UNIFIED, 89
HWLOC_OBJ_CORE, 90
HWLOC_OBJ_DIE, 91
HWLOC_OBJ_GROUP, 90
HWLOC_OBJ_L1CACHE, 90
HWLOC_OBJ_L1ICACHE, 90
HWLOC_OBJ_L2CACHE, 90
HWLOC_OBJ_L2ICACHE, 90
HWLOC_OBJ_L3CACHE, 90
HWLOC_OBJ_L3ICACHE, 90
HWLOC_OBJ_L4CACHE, 90
HWLOC_OBJ_L5CACHE, 90
HWLOC_OBJ_MACHINE, 90
HWLOC_OBJ_MEMCACHE, 91
HWLOC_OBJ_MISC, 91

HWLOC_OBJ_NUMANODE, 91
HWLOC_OBJ_OS_DEVICE, 91
HWLOC_OBJ_OSDEV_COPROC, 89
HWLOC_OBJ_OSDEV_DMA, 90
HWLOC_OBJ_OSDEV_GPU, 89
HWLOC_OBJ_OSDEV_MEMORY, 89
HWLOC_OBJ_OSDEV_NETWORK, 90
HWLOC_OBJ_OSDEV_OPENFABRICS, 90
HWLOC_OBJ_OSDEV_STORAGE, 89
hwloc_obj_osdev_type_e, 89
hwloc_obj_osdev_type_t, 88
HWLOC_OBJ_PACKAGE, 90
HWLOC_OBJ_PCI_DEVICE, 91
HWLOC_OBJ_PU, 90
hwloc_obj_type_t, 90
HWLOC_TYPE_UNORDERED, 88
objs
hwloc_distances_s, 256
oldvalue
hwloc_topology_diff_obj_attr_u::hwloc_topology_diff_obj_attr_string_s, 273
hwloc_topology_diff_obj_attr_u::hwloc_topology_diff_obj_attr_uint64_s, 275
os_index
hwloc_obj, 265
osdev
hwloc_obj_attr_u, 267

page_types
hwloc_obj_attr_u::hwloc_numanode_attr_s, 261
page_types_len
hwloc_obj_attr_u::hwloc_numanode_attr_s, 261
parent
hwloc_obj, 265
pci
hwloc_obj_attr_u::hwloc_bridge_attr_s, 249
pci_bus
hwloc_cl_device_pci_bus_info_khr, 251
pci_device
hwloc_cl_device_pci_bus_info_khr, 251
pci_domain
hwloc_cl_device_pci_bus_info_khr, 251
pci_function
hwloc_cl_device_pci_bus_info_khr, 251
pcidev
hwloc_obj_attr_u, 267
pcie
hwloc_cl_device_topology_amd, 252
phase
hwloc_disc_status, 255
phases
hwloc_backend, 248
hwloc_disc_component, 254
prev_cousin
hwloc_obj, 265
prev_sibling
hwloc_obj, 265
priority
hwloc_disc_component, 254
prog_if
hwloc_obj_attr_u::hwloc_pcidev_attr_s, 269
pu
hwloc_topology_discovery_support, 277

raw
hwloc_cl_device_topology_amd, 252
Remove distances between objects, 188
hwloc_distances_release_remove, 188
hwloc_distances_remove, 188
hwloc_distances_remove_by_depth, 188
hwloc_distances_remove_by_type, 188
Retrieve distances between objects, 179
hwloc_distances_get, 181
hwloc_distances_get_by_depth, 181
hwloc_distances_get_by_name, 181
hwloc_distances_get_by_type, 182
hwloc_distances_get_name, 182
hwloc_distances_kind_e, 179
HWLOC_DISTANCES_KIND_FROM_OS, 179
HWLOC_DISTANCES_KIND_FROM_USER, 179
HWLOC_DISTANCES_KIND_HETEROGENEOUS_TYPES, 180
HWLOC_DISTANCES_KIND_VALUE_BANDWIDTH, 180
HWLOC_DISTANCES_KIND_VALUE_HOPS, 180
HWLOC_DISTANCES_KIND_VALUE_LATENCY, 179
hwloc_distances_release, 182
hwloc_distances_transform, 182
hwloc_distances_transform_e, 180
HWLOC_DISTANCES_TRANSFORM_LINKS, 180
HWLOC_DISTANCES_TRANSFORM_MERGE_SWITCH_PORTS, 180
HWLOC_DISTANCES_TRANSFORM_REMOVE_NULL, 180
HWLOC_DISTANCES_TRANSFORM_TRANSITIVE_CLOSURE, 180
revision
hwloc_obj_attr_u::hwloc_pcidev_attr_s, 269

secondary_bus
hwloc_obj_attr_u::hwloc_bridge_attr_s, 249
set_area_membind
hwloc_topology_membind_support, 279
set_proc_cpubind
hwloc_topology_cpubind_support, 271
set_proc_membind
hwloc_topology_membind_support, 279
set_thisproc_cpubind
hwloc_topology_cpubind_support, 271
set_thisproc_membind
hwloc_topology_membind_support, 279
set_thisthread_cpubind
hwloc_topology_cpubind_support, 271
set_thisthread_membind
hwloc_topology_membind_support, 279
set_thread_cpubind
hwloc_topology_cpubind_support, 271

Sharing topologies between processes, 231
hwloc_shmem_topology_adopt, 231
hwloc_shmem_topology_get_length, 232
hwloc_shmem_topology_write, 232
sibling_rank
hwloc_obj, 266
size
hwloc_obj_attr_u::hwloc_cache_attr_s, 250
hwloc_obj_attr_u::hwloc_numanode_attr_s::hwloc_memory_page_type_s, 260
string
hwloc_topology_diff_obj_attr_u, 274
subdevice_id
hwloc_obj_attr_u::hwloc_pcidev_attr_s, 269
subkind
hwloc_obj_attr_u::hwloc_group_attr_s, 257
subordinate_bus
hwloc_obj_attr_u::hwloc_bridge_attr_s, 249
subtype
hwloc_obj, 266
subvendor_id
hwloc_obj_attr_u::hwloc_pcidev_attr_s, 269
symmetric_subtree
hwloc_obj, 266

The bitmap API, 160
hwloc_bitmap_allbut, 162
hwloc_bitmap_alloc, 162
hwloc_bitmap_alloc_full, 162
hwloc_bitmap_and, 162
hwloc_bitmap_andnot, 162
hwloc_bitmap_asprintf, 163
hwloc_bitmap_clr, 163
hwloc_bitmap_clr_range, 163
hwloc_bitmap_compare, 163
hwloc_bitmap_compare_first, 163
hwloc_bitmap_copy, 164
hwloc_bitmap_dup, 164
hwloc_bitmap_fill, 164
hwloc_bitmap_first, 164
hwloc_bitmap_first_unset, 164
hwloc_bitmap_foreach_begin, 161
hwloc_bitmap_foreach_end, 161
hwloc_bitmap_free, 165
hwloc_bitmap_from_ith_ulong, 165
hwloc_bitmap_from_ulong, 165
hwloc_bitmap_from_ulongs, 165
hwloc_bitmap_intersects, 165
hwloc_bitmap_isequal, 165
hwloc_bitmap_isfull, 166
hwloc_bitmap_isincluded, 166
hwloc_bitmap_isset, 166
hwloc_bitmap_iszero, 166
hwloc_bitmap_last, 166
hwloc_bitmap_last_unset, 167
hwloc_bitmap_list_asprintf, 167
hwloc_bitmap_list_snprintf, 167
hwloc_bitmap_list_sscanf, 167
hwloc_bitmap_next, 168
hwloc_bitmap_next_unset, 168
hwloc_bitmap_not, 168
hwloc_bitmap_nr_ulongs, 168
hwloc_bitmap_only, 168
hwloc_bitmap_or, 169
hwloc_bitmap_set, 169
hwloc_bitmap_set_ith_ulong, 169
hwloc_bitmap_set_range, 169
hwloc_bitmap_singlify, 169
hwloc_bitmap_snprintf, 170
hwloc_bitmap_sscanf, 170
hwloc_bitmap_t, 162
hwloc_bitmap_taskset_asprintf, 170
hwloc_bitmap_taskset_snprintf, 170
hwloc_bitmap_taskset_sscanf, 170
hwloc_bitmap_to_ith_ulong, 171
hwloc_bitmap_to_ulong, 171
hwloc_bitmap_to_ulongs, 171
hwloc_bitmap_weight, 171
hwloc_bitmap_xor, 171
hwloc_bitmap_zero, 171
hwloc_const_bitmap_t, 162
too_complex
hwloc_topology_diff_u, 276
Topology Creation and Destruction, 94
hwloc_topology_abi_check, 94
hwloc_topology_check, 94
hwloc_topology_destroy, 95
hwloc_topology_dup, 95
hwloc_topology_init, 95
hwloc_topology_load, 95
hwloc_topology_t, 94
Topology Detection Configuration and Query, 124
HWLOC_TOPOLOGY_FLAG_DONT_CHANGE_BINDING, 127
HWLOC_TOPOLOGY_FLAG_IMPORT_SUPPORT, 126
HWLOC_TOPOLOGY_FLAG_INCLUDE_DISALLOWED, 125
HWLOC_TOPOLOGY_FLAG_IS_THISSYSTEM, 125
HWLOC_TOPOLOGY_FLAG_NO_CPUKINDS, 128
HWLOC_TOPOLOGY_FLAG_NO_DISTANCES, 127
HWLOC_TOPOLOGY_FLAG_NO_MEMATTRS, 128
HWLOC_TOPOLOGY_FLAG_RESTRICT_TO_CPUBINDING, 127
HWLOC_TOPOLOGY_FLAG_RESTRICT_TO_MEMBINDING, 127
HWLOC_TOPOLOGY_FLAG_THISSYSTEM_ALLOWED_RESOURC
126
hwloc_topology_flags_e, 124
hwloc_topology_get_flags, 128
hwloc_topology_get_support, 129
hwloc_topology_get_type_filter, 129
hwloc_topology_get_userdata, 129

hwloc_topology_is_thissystem, 130
hwloc_topology_set_all_types_filter, 130
hwloc_topology_set_cache_types_filter, 130
hwloc_topology_set_flags, 130
hwloc_topology_set_icache_types_filter, 131
hwloc_topology_set_io_types_filter, 131
hwloc_topology_set_type_filter, 131
hwloc_topology_set_userdata, 131
hwloc_type_filter_e, 128
HWLOC_TYPE_FILTER_KEEP_ALL, 128
HWLOC_TYPE_FILTER_KEEP_IMPORTANT, 128
HWLOC_TYPE_FILTER_KEEP_NONE, 128
HWLOC_TYPE_FILTER_KEEP_STRUCTURE, 128
Topology differences, 226
hwloc_topology_diff_apply, 228
hwloc_topology_diff_apply_flags_e, 227
HWLOC_TOPOLOGY_DIFF_APPLY_REVERSE, 227
hwloc_topology_diff_build, 228
hwloc_topology_diff_destroy, 228
hwloc_topology_diff_export_xml, 229
hwloc_topology_diff_export_xmlbuffer, 229
hwloc_topology_diff_load_xml, 229
hwloc_topology_diff_load_xmlbuffer, 230
HWLOC_TOPOLOGY_DIFF_OBJ_ATTR, 227
HWLOC_TOPOLOGY_DIFF_OBJ_ATTR_INFO, 227
HWLOC_TOPOLOGY_DIFF_OBJ_ATTR_NAME, 227
HWLOC_TOPOLOGY_DIFF_OBJ_ATTR_SIZE, 227
hwloc_topology_diff_obj_attr_type_e, 227
hwloc_topology_diff_obj_attr_type_t, 226
hwloc_topology_diff_t, 226
HWLOC_TOPOLOGY_DIFF_TOO_COMPLEX, 227
hwloc_topology_diff_type_e, 227
hwloc_topology_diff_type_t, 227
total_memory
hwloc_obj, 266
type
hwloc_cl_device_topology_amd, 252
hwloc_component, 253
hwloc_location, 259
hwloc_obj, 266
hwloc_obj_attr_u::hwloc_cache_attr_s, 250
hwloc_obj_attr_u::hwloc_osdev_attr_s, 268
hwloc_topology_diff_obj_attr_u::hwloc_topology_diff_obj_attr_generic_s, 272
hwloc_topology_diff_obj_attr_u::hwloc_topology_diff_obj_attr_string_s, 273
hwloc_topology_diff_obj_attr_u::hwloc_topology_diff_obj_attr_uint64_s, 275
hwloc_topology_diff_u::hwloc_topology_diff_generic_s, 271
hwloc_topology_diff_u::hwloc_topology_diff_obj_attr_s, 273
hwloc_topology_diff_u::hwloc_topology_diff_too_complex_s, 276

uint64
hwloc_topology_diff_obj_attr_u, 274
unused
hwloc_cl_device_topology_amd, 252
upstream
hwloc_obj_attr_u::hwloc_bridge_attr_s, 249
upstream_type
hwloc_obj_attr_u::hwloc_bridge_attr_s, 249
userdata
hwloc_obj, 266

value
hwloc_info_s, 258
values
hwloc_distances_s, 256
vendor_id
hwloc_obj_attr_u::hwloc_pcidev_attr_s, 269

weighted_interleave_membind
hwloc_topology_membind_support, 279
Windows-specific helpers, 209
hwloc_windows_get_nr_processor_groups, 209
hwloc_windows_get_processor_group_cpuset, 209